BK460 Inline Base

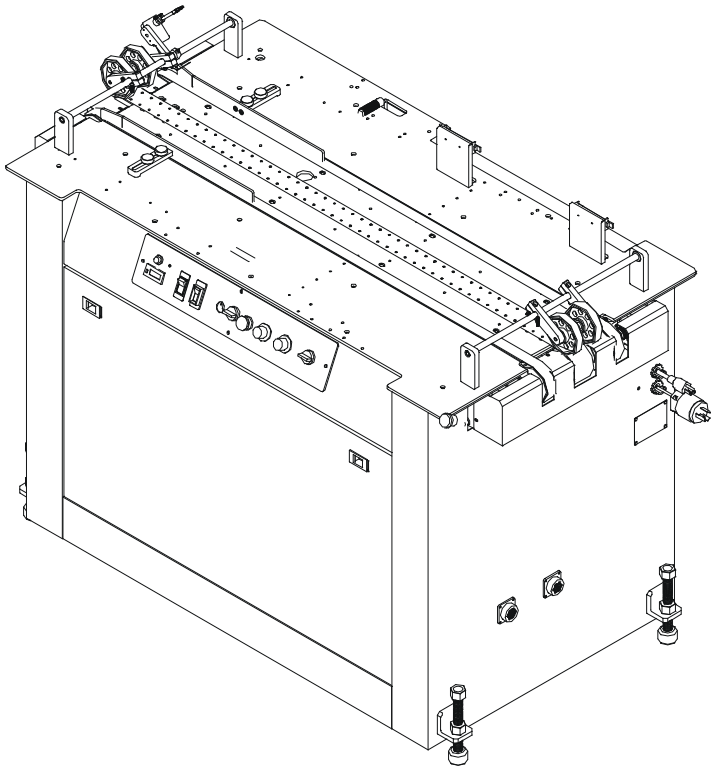

BK460 Inline Base Manual

By Paul Slack

Published by:

Buskro Ltd.
1738 Orangebrook Court., Unit #1
Pickering, ON, L1W 3G8
Canada
Tel.: (905) 839-6018
Fax: (905) 839-6023

First Edition, 2000

Printed in Canada

Table of Contents

List of Figures and tables:

Chapter 1

Chapter 2

Appendix A

Appendix B

Chapter 1

General Information

1.1 Description

The Buskro Inline Base is a system comprised of a transport mechanism that is controlled via a centrally located operator control panel. The system was specifically designed as a flexible and reliable platform whose purpose was to optimize the performance of an inkjet imaging system. The inkjet base, in conjunction with the BK660 Inkjet Controller or BK640 Controller, produces some of the highest quality imaging within one of the simplest and most efficient operating environments.

The mail piece transport system, designed for the inkjet process, consists of vacuum equipped table belts with side guides. These are present at the input to reduce mail piece skew prior to entry into the inkjet imaging area. Sequencing of the inkjet process is provided by a directly coupled shaft encoder mounted on the transport belt driveshaft.

Operator control of the inkjet base is provided by a series of electrical switches and buttons displayed on a clear unhindered control panel centrally positioned at the front of the base. The control panel consists of circuit breaker switches for the Main and Vacuum power; a resetable LCD piece totalizing counter; rotary dial potentiometers for the conveyor, base; Start/Stop/Jog/Run pushbutton controls for machine operation; and an On/Off/Auto selector for the conveyor.

All these features, in addition to the manufacturing quality and innovative product design, add up to an extremely functional inkjet base capable of years of reliable, trouble-free operation.

1.2 Features

1.2.1 Vacuum Table Belts

The table belts, which transport the mail pieces from a feeder past the inkjet imaging region, are equipped with vacuum to provide positive adhesion and transport resulting in a completely unhindered area for the inkjet heads, enabling unparalleled head placement capabilities.

1.2.2 Controller Upgrade-ability

The inline base will accommodate both the BK400 and BK600 controllers with the ability to field-upgrade from a BK400 to BK600 controller at any time. A minimal amount of effort and time is required to accomplish the upgrade task.

1.2.3 Complete Instrument Panel

All necessary controls required to operate the inline base are easily accessible to the operator on a central instrument panel. The control panel comes complete with circuit-breaker equipped rocker switches, large pushbuttons for all machine/conveyor functions, variable speed potentiometers for machine/conveyor speed regulation, and a resetable piece counter.

1.2.4 BK1600 Series Conveyor Compatibility

The inline base is fully compatible with any BK1600 series conveyor from a 6-ft model through to an 18-ft. model. Connection to the conveyor is made through a 7 pin circular plastic connector located at the end of the base. A DC-speed controller mounted inside the base comes with a speed potentiometer, located on the front panel, for complete control of the conveyor's belt speed.

1.2.5 BK530 Tabber Compatibility

The inline base is compatible with a BK530 Tabber allowing full integration between the Tabber and base controls such that either tabber or base operator controls can directly stop and/or start the entire system. Connection to the BK530 Tabber is made through a 37 pin circular plastic connector located at the end of the base.

1.3 Specifications

Table 1.1 *– BK460 Base specifications*

1.3.1 Product handling			
	Minimum	3.0” X 5.0”	76 mm X 127 mm
	Maximum	16.0” x 17.0”	405 mm X 432mm
	Thickness	Single Sheet to 1 1/8”	Up to 28 mm
1.3.2 Physical			
	Overall Length	51”	1294 mm
	Tabletop Height	35.5” to 37.0”	901 mm to 940 mm
	Overall Width	28”	711 mm
	Weight *crated*	500 lbs	181.7 kg
1.3.3 Production rate			
	Belt Speed	0 to 600 ft/min	0 to 2.50 m/s
	Cycle Speed	0 to 30,000 pph	
	Conveyor Speed	0 to 26.0 in/s	0 to 0.7 m/s
1.3.4 Electrical requirements			
	Line Voltage	220 ± 15% VAC	
	Line Current	15 Amps	
	Power	3.3 kVA	
	Base Motors	1/2 H.P., 180 VDC @ 2.8A	
	Transport Blower	1/8 H.P., 220 VAC @ 1.1A 27 CFM @ 0” H_2O	
	Conveyor Interface	1/8 H.P., 90 VDC @ 1.3A DC Controller	
1.3.5 Operator controls			
	Circuit-Breaker Switch	Main, Vacuum	
	Machine Pushbuttons	Start, Stop, Run/Jog	
	Conveyor Selector	On/Off/Auto	
	Potentiometers	Stack, Production, Conveyor	
	Counter	6-digit resetable	

Table 1.1 *– BK460 Base specifications (continued)*

1.3.6 System connectors			
	Conveyor	7 pin, 23-7 receptacle	Amp #206227-1
	Inline Remote	37 pin, 23-37 receptacle	Amp #206306-1
	Main Power	3 pin, 220 VAC @ 20A NEMA L6-20P	Hubbell #2321CN
	Controller Power *North American models*	3 pin, 115 VAC @ 15A NEMA #5-15P	Hubbell #5266CCN

1.4 Inline System Drawings

1.4.1 BK460 Inline Base System Drawing

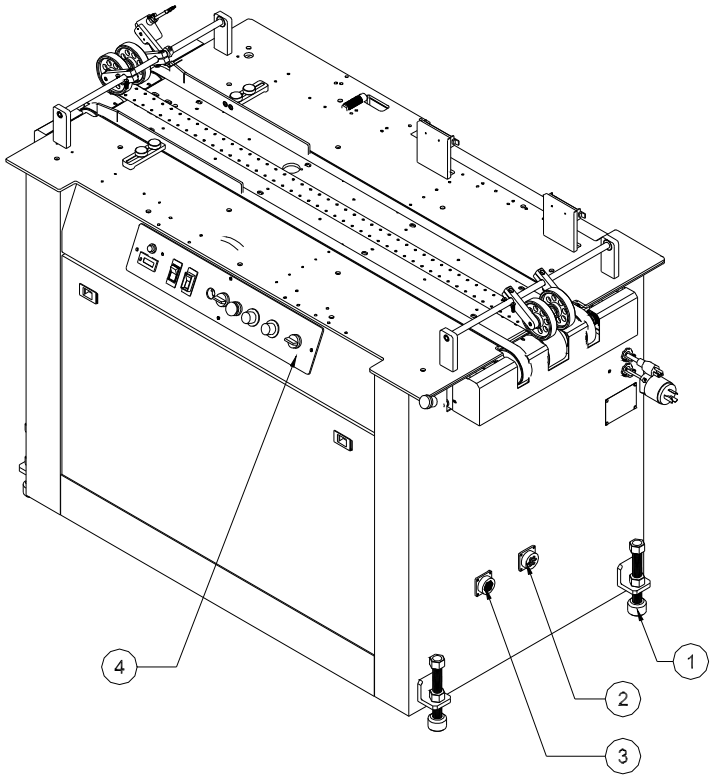

Table 1.2 *– BK460 Inline Base Operator Controls, Features, and Installation Points.*

Item	Description	Reference
1	Base Mounting Foot	
2	Conveyor Connector	Page B-16
3	Inline Connector	Page B-15
4	Instrument Panel	Page A-9, A-10

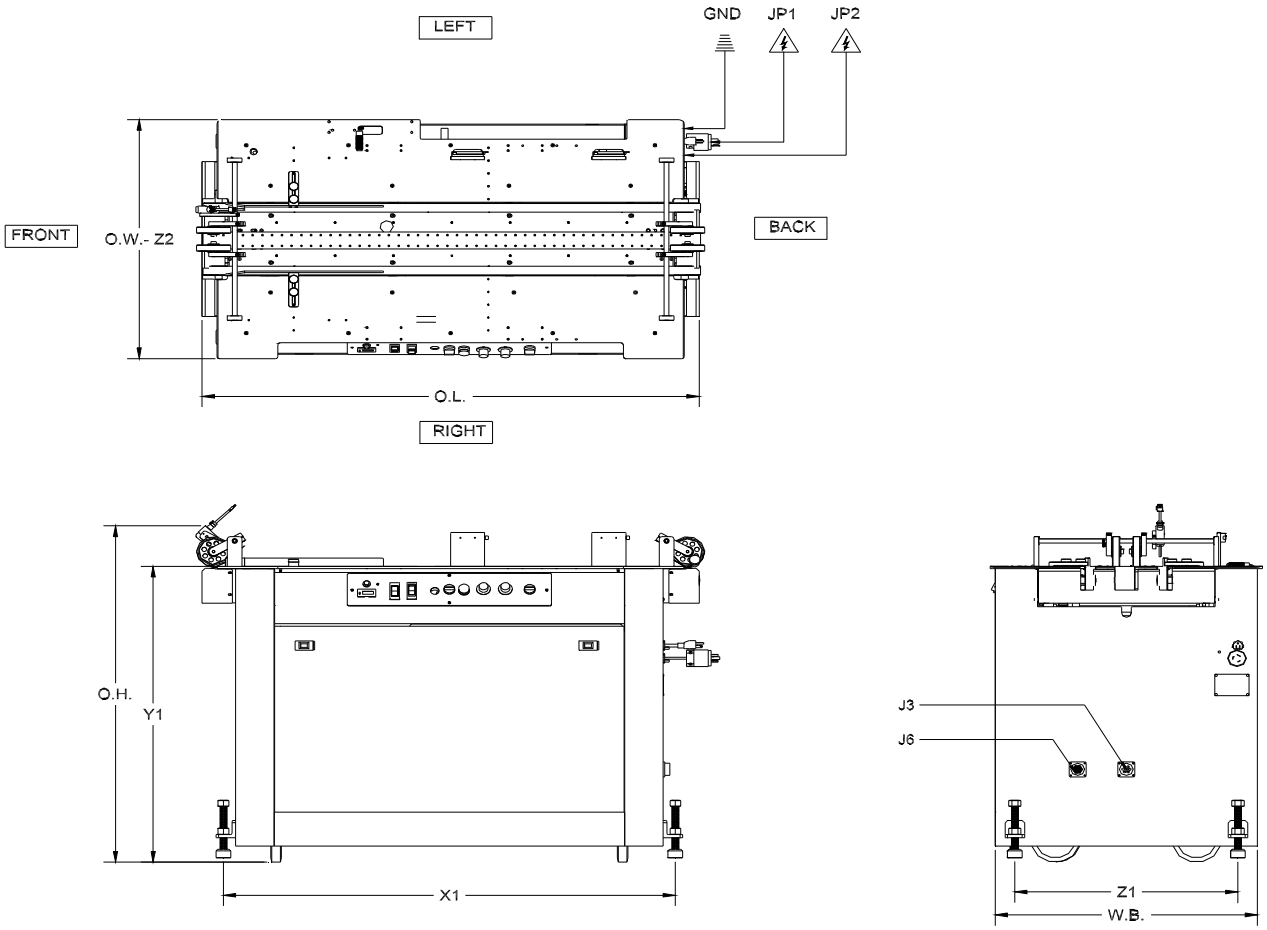

Table 1.3 – *BK460 Inline Base Dimensions and Interface Specifications*

Symbol	Description		Dimensions	
O.W.	**Overall Width**		**28.00”**	**711 mm**
O.L.	**Overall Length**		**51.08”**	**1297 mm**
O.H.	**Overall Height**		**39.39”**	**1000 mm**
W.B.	Overall Base Width		26.94”	684 mm
X1	Leveling Foot Length		46.44”	1180 mm
Y1	Tabletop Height		34.64” to 37”	880 mm to 940 mm
Z1	Leveling Foot Width		22.93”	582 mm
Z2	Tabletop Width		28.00”	711 mm
J6	Inline Connector	*(see Appendix B)*	37 pin CPC Receptacle	*male (AMP P/N 206306-1)*
J3	Conveyor Connector	*(see Appendix B)*	7 pin CPC Receptacle	*female (AMP P/N 206227-1)*
JP1	Base Power Connector	*(see Appendix B)*	Twist-Lock Plug, 20A, 250V	*(HUBBELL P/N. 2321CN)*
JP2	Controller Power Connector	*(see Appendix B)*	Straight Blade Plug, 15A, 125V	*(HUBBELL P/N 5266CN)*

Chapter 2

Operator Instructions

2.1 Instrument Panel Functions

The Buskro BK460 Inline base is equipped with a centrally located instrument panel which displays all the necessary controls to operate the system. The controls can be sub-divided into 4 distinct classes of functions which are:

- Main and Vacuum Power Rocker **Switches**
- Machine and Conveyor Function **Pushbuttons**
- Production, Conveyor Speed, and Gap Regulation **Dials**
- Resetable Piece **Counter**

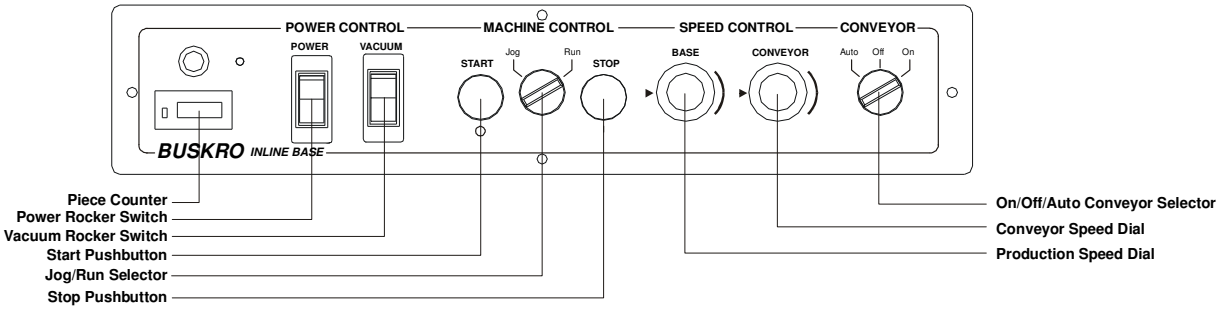

Figure 2.1*- BK460 Base Instrument Panel illustrating operator controls including power switches, speed and gap regulation dials, machine and conveyor pushbuttons, and a resetable piece counter.*

2.1.1 Power Rocker Switches

The power rocker switches, the two switches located to the right of the piece counter, provide power to the inkjet base (**Power**) and the feeder pump and transport blower (**Vacuum**). These switches are equipped with resetable circuit breakers to protect against overload conditions.

Power Rocker Switch

Switch which turns on the main power to the inline base. The circuit breaker is rated at 15 Amps @ 220 VAC for the BK460 inline base.

Note : When working in the electrical box, disconnect the inlet plug for complete safety. Turning the **Power** rocker switch OFF will not disengage all 220 VAC circuitry.

Vacuum Rocker Switch

Switch which applies power to the feeder pump and the transport blower turning them on. When the switch is ON, it should illuminate indicating that power is available to the transport blower. The circuit breaker is rated at 10 Amps @ 220 VAC for the BK460 inline base.

2.1.2 Production, Conveyor, and Gap Regulation Dials

The speed regulation dials, one for the base (**Production**) and one for the conveyor (**Conveyor**) are situated to the right of the machine pushbuttons and to the right of the instrument panel respectively. These dials permit adjustment of transport belt and conveyor speeds in the following manner; A clockwise rotation of the **Production** and **Conveyor** speed dials corresponds to a speed increase. Conversely, a counter-clockwise rotation of the dials results in a speed decrease.

Production Dial

The **Production** dial adjusts the speed of the transport belts. The speed settings range from 0 to 2.5 m/s (600 ft/min). A clockwise rotation of the dial corresponds to a speed increase of the transport belts. Conversely, a transport belt speed decrease is observed for a counter-clockwise rotation of the **Production** dial.

Conveyor Dial

The **Conveyor** dial adjusts the speed of the conveyor belts and has two operating modes: ON and AUTO. When in AUTO mode, the conveyor stops and starts with the BK460 Inline base. When in ON mode, the conveyor will remain on at all times.

2.1.3 Machine and Conveyor Function Pushbuttons

The pushbuttons and selector knobs located on the instrument panel permit control of the machine and conveyor operation. The **Start** (*green*) and **Stop** (*red*) pushbuttons allow engagement and suspension of the inkjet operation. The **Run/Jog** *(black)* selector sets the system to run continuously (RUN) when the **Start** button is momentarily depressed, or intermittently (JOG) while the **Start** button remains depressed.

The conveyor is equipped with its own control in the form of an **On/Off/Auto** selector knob *(black)* which determines the operating mode of the conveyor. It can be operated continuously, in conjunction with the base, or turned off completely.

Stop Pushbutton

The red mushroom-button which suspends operation of the inkjet system by interrupting the power to the machine relays located in the electrical cabinet. This button is used mostly as an emergency stop since depressing it will cause the machine to stop immediately regardless of the printing status.

Note : The Stop pushbutton has a locking feature, which when engaged, will prevent the system from functioning. Should this condition occur, twist and release the locking mechanism to allow base operation.

Start Pushbutton

The green Pushbutton which applies power to the transport and conveyor motor controllers (*See BASE460EL2.CDR in Appendix B for details*). When this button is depressed, the machine should cycle provided that the following conditions have been met :

- The machine **Stop** button is not locked in a depressed condition.
- The conveyor **Stop** button is not depressed (if present).
- With a conveyor not present, a jumper must be installed between pin 6 and 7 on connector J6.
- With a downstream device (i.e. BK530 tabber) not present, the *Remote Toggle switch* is set to Disable (Up).

Run/Jog Selector

Selector knob which permits a choice between continuous and intermittent machine operation. When the **Run** mode has been selected and the **Start** button is depressed, the machine will operate continuously. In the **Jog** mode, the machine will cycle only as long as the **Start** button remains depressed.

- **Run Mode** - Machine will operate the instant **Start** button is depressed.
- **Jog Mode** - Machine will operate only while the **Start** button is depressed.

On/Off/Auto Selector

The conveyor **On/Off/Auto** selector determines the operating mode of the conveyor. With an AUTO selection, the conveyor "mirrors" the status of the inline base's operation; that is, it is on when the base is on, and off when it is off. An ON selection, on the other hand, sets the conveyor to run continuously independent of the base's operating mode. An OFF selection suspends the conveyor's operation all together.

2.1.4 Resetable Piece Counter

Counter, located on the left side of the instrument panel, which monitors and totalizes the number of mailpieces that are detected by the photocue sensor (not installed on the stand-alone base). The counter can be reset to zero by depressing the reset button located on the front of the counter. If desired to prevent accidental resets, the counter reset button can be locked by clicking it in the down position.

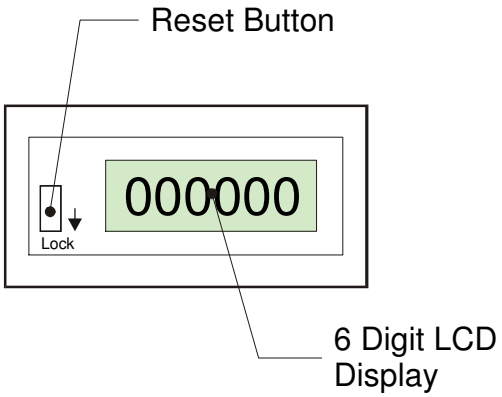

Figure 2.2 *- Front panel piece counter indicating the location of the reset button and its locking mechanism.*

2.2 Material Side Guide Adjustments

Proper adjustment of the material side guides will permit dependable and accurate feeding of the mailpieces so that they are correctly aligned when presented under the printhead(s). The objective of this section of the transport base is to straighten out any mailpiece which may come from the infeed in a skewed manner such that when the printheads produce the image, it will be placed properly and accurately onto the mailpiece. When adjustment of the side guides is performed, it is imperative that they not squeeze and retard the advancing mailpiece as this would result in incorrect print positioning.

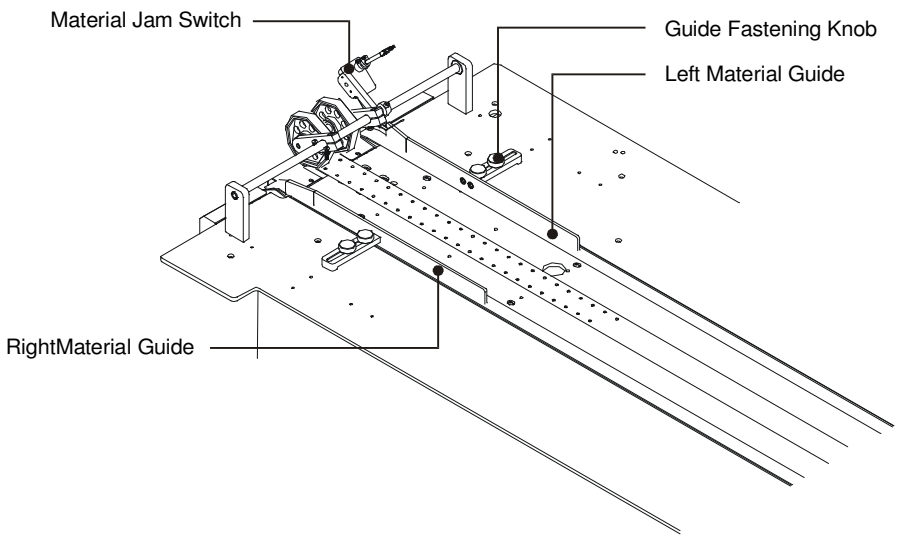

Figure 2.3 *- Outfeed section of the feed rollers illustrating the material side guides.*

Adjusting the Material Side Guides (*see Figure 2.3*)

The material side guides, used to correct mailpiece skew, must be set correctly to ensure that the mailpieces are directed in a straight fashion into the inline imaging area

1. Loosen and remove the fastening knob(s) present on each *material side guide*.
2. Turn the blower pump ON and place a mailpiece onto the transport belts.
3. Place the *left* and *right side guides* about 1/16" to 1/8" from the corresponding edge of the mailpiece. Ensure that the guides do not pinch the mailpiece anywhere along its edges.
4. Replace the fastening knob(s) in the nearest threaded holes located in the base's tabletop, and by turning them in a clockwise fashion, re-tighten them.
5. Dispense another mailpiece onto the transport belts and check that the mailpiece's path is unobstructed by the material side guides. If so repeat *steps 1 to 4*.

Note : If the material side guides are improperly set, the mailpiece may become trapped between them and/or cause a jam at the infeed. The Material Jam switch may trigger resulting in a system stoppage if the material side guides are incorrectly set.

2.3 Inline and Stand-alone Operation

The BK460 base can be operated stand-alone or inline with a BK425 feeder base. In the case of operation with a BK425 feeder, the toggle switch shown in Figure 2.4 must be set in the down position. In this case the base uses the BK425 cycle switch. With the toggle switch in the up position, the BK460 uses the photoeye pulse to act as the cycle switch.

***Figure 2.4**: Toggle Switch and Speed Potentiometer.*

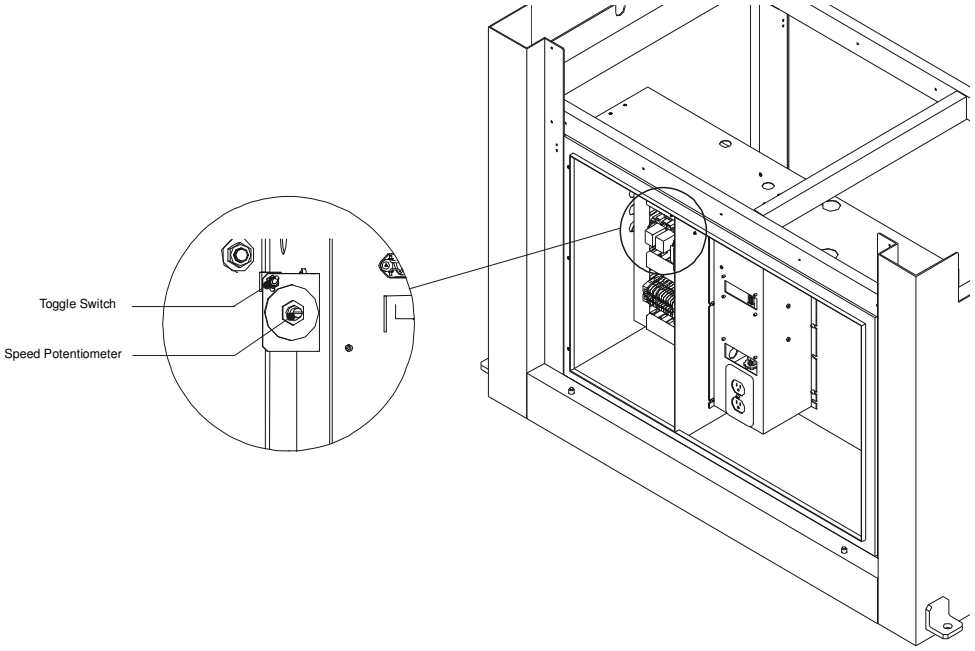

2.4 Stack Potentiometer

The stack option on the inline base allows for a shingling of the material on the conveyor. The stack potentiometer shown in figure 2.4 is what controls this shingling and is engaged when a stacking option is required. A stack location field must be chosen and set within the Compose software. When the software encounters a green highlighted stacked field within the mailing list, the controls for the speed of the base motor are switched from the potentiometer located on the control panel to the stack potentiometer. Turning the potentiometer clockwise increases the conveyor stacking speed and conversely turning it counterclockwise slows it down.

2.5 Maintenance Schedule

The maintenance schedule table presented below applies to equipment which is operated daily on an 8 hour basis. If the equipment is to be used more frequently than the aforementioned operating standard, please adjust your schedule accordingly.

Table 2.1 *- Maintenance Schedule Table*

Period	Maintenance Function
Daily	Wipe table surface clean of paper dust and other accumulated debris. Remove the front door and clean any debris which may have fallen into the machine. Wipe away any ink which may have settled on the tabletops, belts, and rollers.
Monthly	Clean vacuum lines and fittings with compressed air.
Semi-Annually	**The following operations should be performed with the Transport Belt Tabletop Assembly removed for access.** Grease the two bearings holding the transport driveshaft. These bearings are equipped with grease nipples. Use any commercially available grease. Examine all mechanical drive components for wear. Replace if necessary. Examine the table belts and feed rollers for wear. Replace if necessary.

Note : Acquiring a small air compressor is recommended. Compressed air is useful in removing debris and is indispensable in cleaning out the vacuum systems.

Appendix

A

Base Mechanical Drawings

List of Figures

List of Tables

A. Balloon Annotation

a)

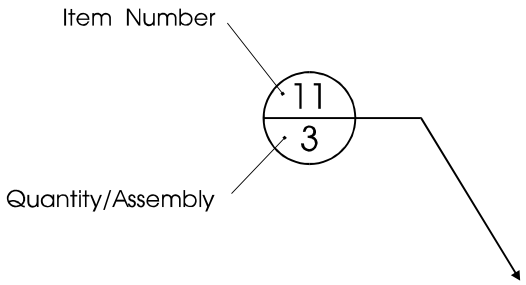

b) **Item Number:**

This is the designation number that references the part drawing to its respective part number and description. This reference number is located in the first column of the Parts Listing table.

c) **Quantity / Assembly:**

This is the designation number that references the quantity of a certain item that appear on the entire assembly. This reference number is shown in the third column of the Parts Listing table.

B. Parts Listing Table

Item	Part No.	Quantity	Description	Reference
1				
2				

a) **Item:**

This is the reference number given to a part on the assembly drawing.

b) **Part No.:**

Represents the Buskro Part Number.

c) **Quantity:**

Represents the number of times the part appears on the assembly.

d) **Description:**

Contains a brief description of the part.

e) **Reference:**

This column will include a page location for easy referencing of assemblies.

Figure A1: *Buskro 4 Series Inline Base Assembly (Right), (BK4IBRA)*

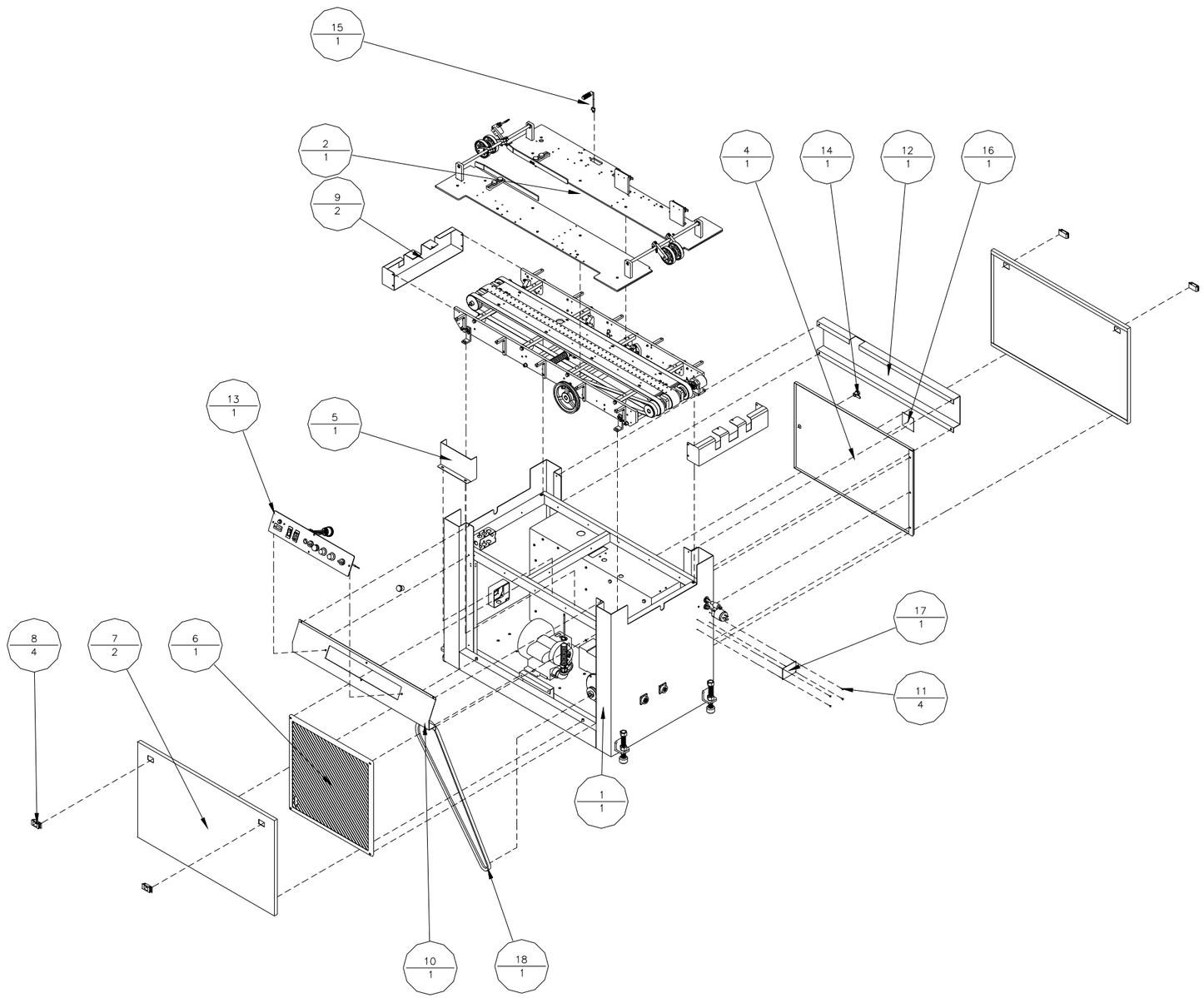

Table A1: *Buskro 4 Series Inline Base Assembly (Right) (BK4IBRA)*

Item	Part Number	Quantity	Description	Reference
1	700463A	1	Inline Base Cabinet Assembly	Page A-3
2	325461A	1	BK460 Tabletop Assembly	Page A-7
3	330337A	1	Inline Base Mechanical Assembly	Page A-5
4	700330	1	Electrical Box Cover	
5	700333	1	Pulley Guard Cover	
6	700041	1	Protective Screen	
7	700042	2	Inline Cabinet Door	
8	446000	4	Slide Latch – A3	
9	700339	2	Table End Cover	
10	713330	1	Panel, Base Instrument	
11	902002	4	Rivets, 1/8” Dia.	
12	9100340	1	Rear Top Cover, Inline Base	
13	603415A	1	Instrument Panel Assembly	Page A-9
14	615313	1	Cam Lock, 5/8”	
15	630002A	1	Photocue Sensor Assembly	Page A-11
16	803020	1	Electrical Warning Label	
17	803001	1	Buskro Nameplate	
18	120361	1	“V” Belt, A54	

Figure A2: *Inline Base Cabinet Assembly, (700463A)*

Front View

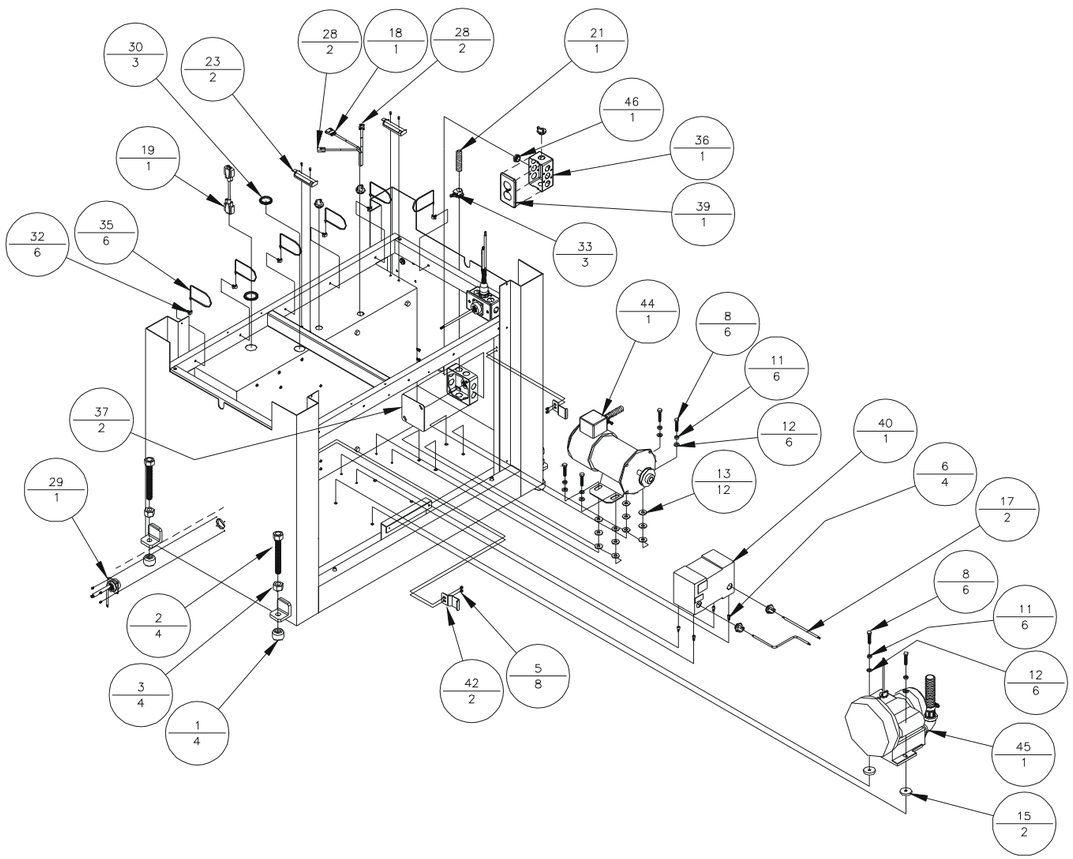

Back View

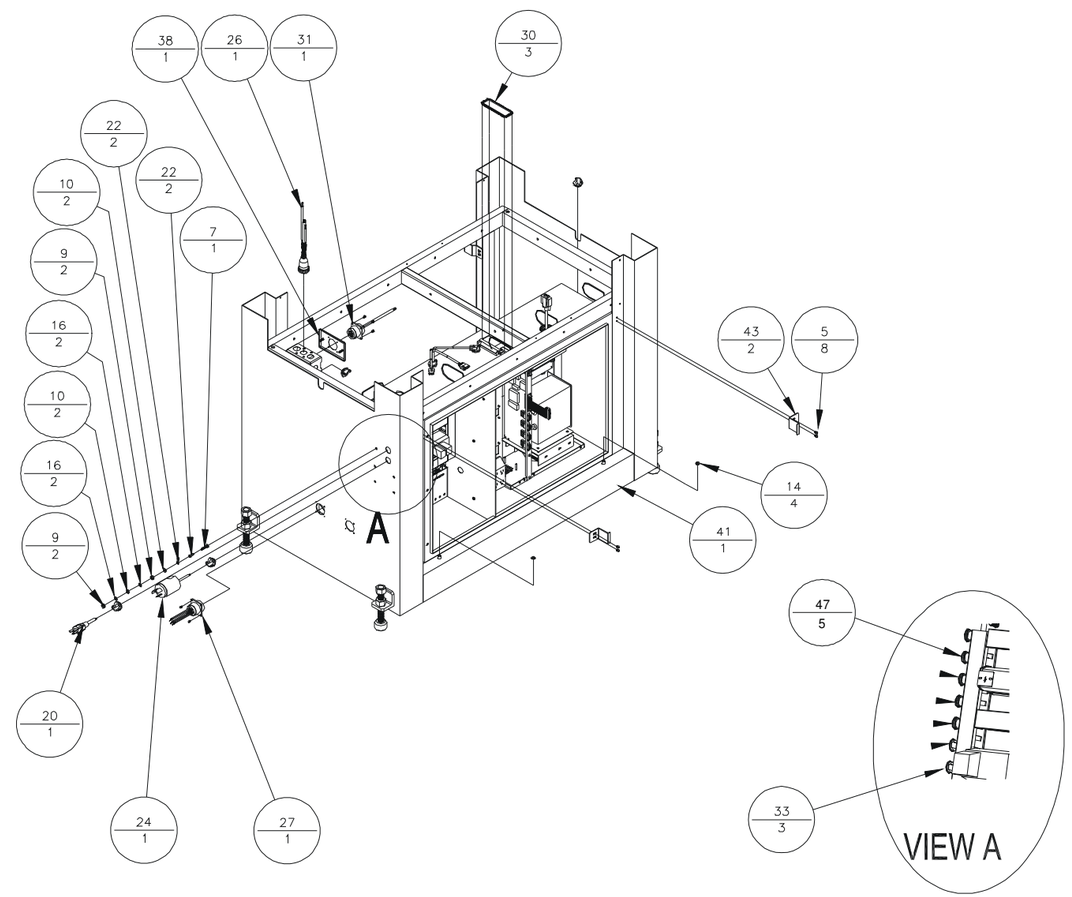

Table A2: *Inline Base Cabinet Assembly (700463A)*

Item	Part Number	Quantity	Description	Reference
1	343010	4	Base Mounting Foot	
2	343015	4	Base Mounting Leg	
3	343016	4	Jam Nut, 3/4-10 UNC	
5	404510	8	Screw, BHCS, 10-32 UNF X 1/4"	
6	405220	4	Screw, SHCS, 1/4-20 UNC X 3/8"	
7	405570SS	1	Screw, BHCS, 1/4-20 UNC X 1"	
8	406680	6	Screw, HHMS, 5/16-18 UNC X 1 1/2"	
9	420010	2	Nut, 1/4-20 UNC	
10	439010	2	Lockwasher, 1-4-20 I.D.	
11	439015	6	Lockwasher, 5/16 I.D.	
12	440015	6	Washer, 5/16" I.D.	
13	440038	12	Washer, 7/16" I.D.	
14	440510	4	Rubber Washer, 1/4" I.D.	
15	440511	2	Rubber Washer, 5/16 X 1 1/2 X 1/4	
16	442530	2	Spacer Washer, 1/4 I.D. X 0.032 THK	
17	606034	2	Cable, #16-3, SJOW-A, 6" Length	
18	606300A	1	Shaft Encoder Cable	Page A-30
20	606330	1	Replacement Cord, #16-3 X 15 FT	
21	609100	1	Conduit, Black, 3/8"	
22	609115	2	Ring Tongue Terminal,1/4"	
23	609300	2	Ribbon Cable Tie Mount	
24	614015A	1	Base Power Cable	Page A-29
26	614051A	1	BK600 Instrument Control Cable	Page A-27
27	614056A	1	Conveyor Cable	Page A-26
28	614061A	2	Jam/Proxi/Photocue Cable	Page A-25
29	614135A	1	Inline Remote Cable	Page A-24
30	615026	3	Flexible Grommet Edging	
31	614050A	1	Main Power Cable	Page A-28
32	615103	6	Tie Mount Wrap	
33	615130	3	Box Connector, 3/8", Conduit	
35	615141	6	Lashing Tie	
36	615150	1	Electrical Junction Box, 2" X 4"	
37	615153	2	Box Cover, 4" X 4"	
38	615154	1	Receptacle Cover, w/Cutout	
39	615155	1	Box Cover, Duplex Receptacle	
40	640001	1	Transformer, Single Phase, 240/120	
41	706463A	1	Inline Base Electrical Box Assembly	Page A-31
42	717050	2	Base Door Catch	
43	717051	2	Base Door Catch, Inline	
44	800002A	1	Motor Assembly	Page A-23
45	801105A	1	Regenerative Blower Assembly	Page A-22
46	9100804	1	Box Connector, Inline	
47	615131	5	Box Connector, 3/8”, Cable	

Figure A3: *Base Mechanical Assembly,(330337A)*

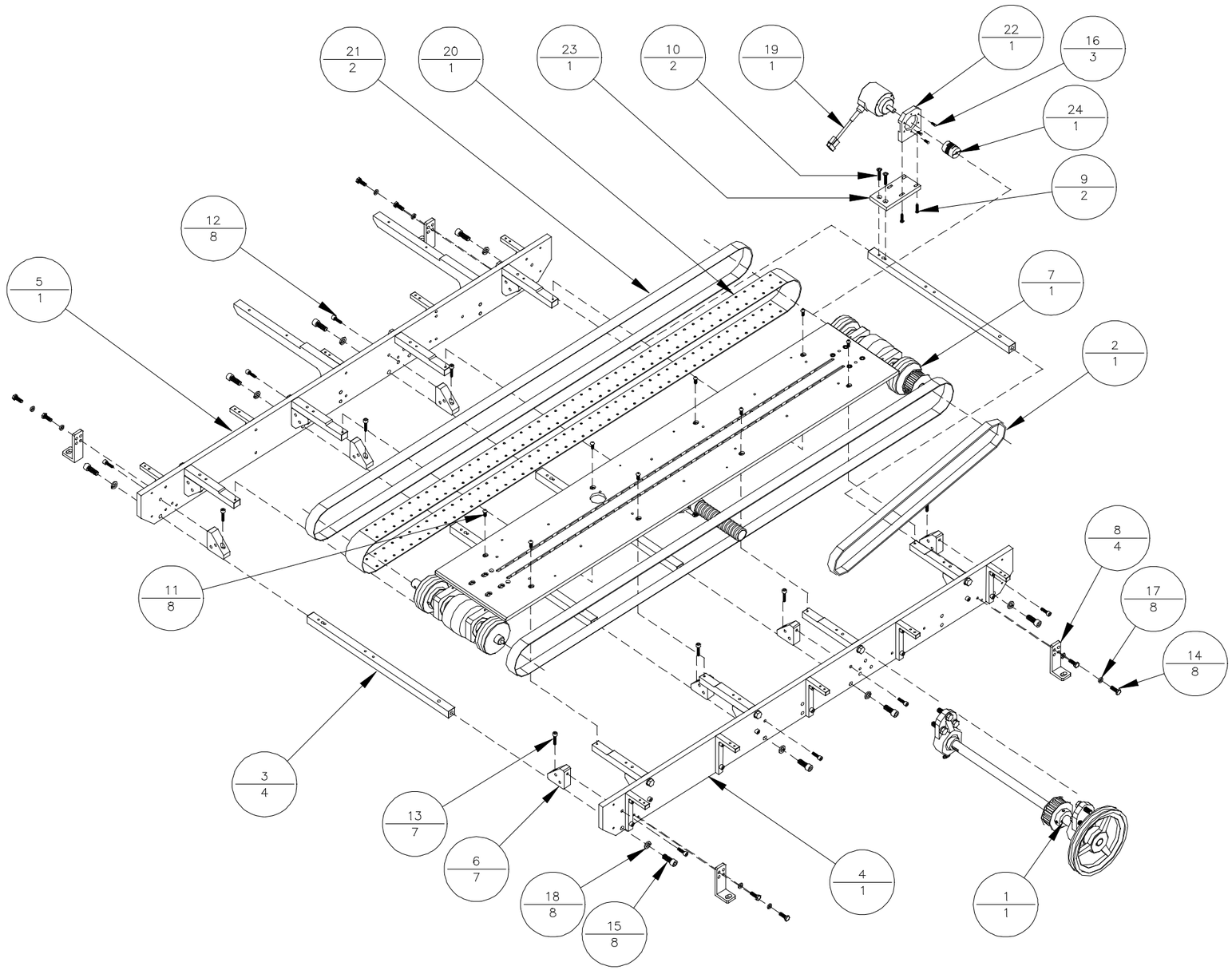

Table A3: *Base Mechanical Assembly (330337A)*

Item	Part Number	Quantity	Description	Reference
1	116301A	1	Inline Mainshaft Assembly	Page A-12
2	120342	1	Timing Belt, 420L075	
3	300331	4	Inline Base Crossmember	
4	300331A	1	Inline Right Sideframe Assembly	Page A-15
5	300332A	1	Inline Left Sideframe Assembly	Page A-13
6	310322	7	Angle Bracket	
7	325331A	1	Vacuum Belt Tabletop Assembly (Inline)	Page A-17
8	330023H	4	Frame Mounting Foot	
9	403550	2	Screw, BHCS, 8/32 UNC X 3/4"	
10	404070	2	Screw, FHCS, 10-32 UNF X 1"	
11	404530	8	Screw, BHCS, 10-32 UNF X 1/2"	
12	405250	8	Screw, SHCS, 1/4-20, UNC X 3/4"	
13	405270	7	Screw, SHCS, 1/4-20, UNC X 1"	
14	405650	8	Screw, HHMS, 1/4-20 UNC X 3/4"	
15	407270	8	Screw, SHCS, 3/8-16 UNC X 1"	
16	413510	3	Screw, BHCS, M3 X 10	
17	439010	8	Lockwasher, 1/4" I.D.	
18	439020	8	Lockwasher, 3/8" I.D.	
19	9100188A	1	Shaft Encoder Assembly	Page A-19
20	9100244	1	Table Belt 2", Heat Resistant	
21	9100245	2	Table Belt 1", Heat Resistant	
22	9100455	1	Encoder Mount	
23	9100456	1	Encoder Bracket	
24	9100457	1	Helical Coupling	

Figure A4: *Tabletop Assembly, (325461A)*

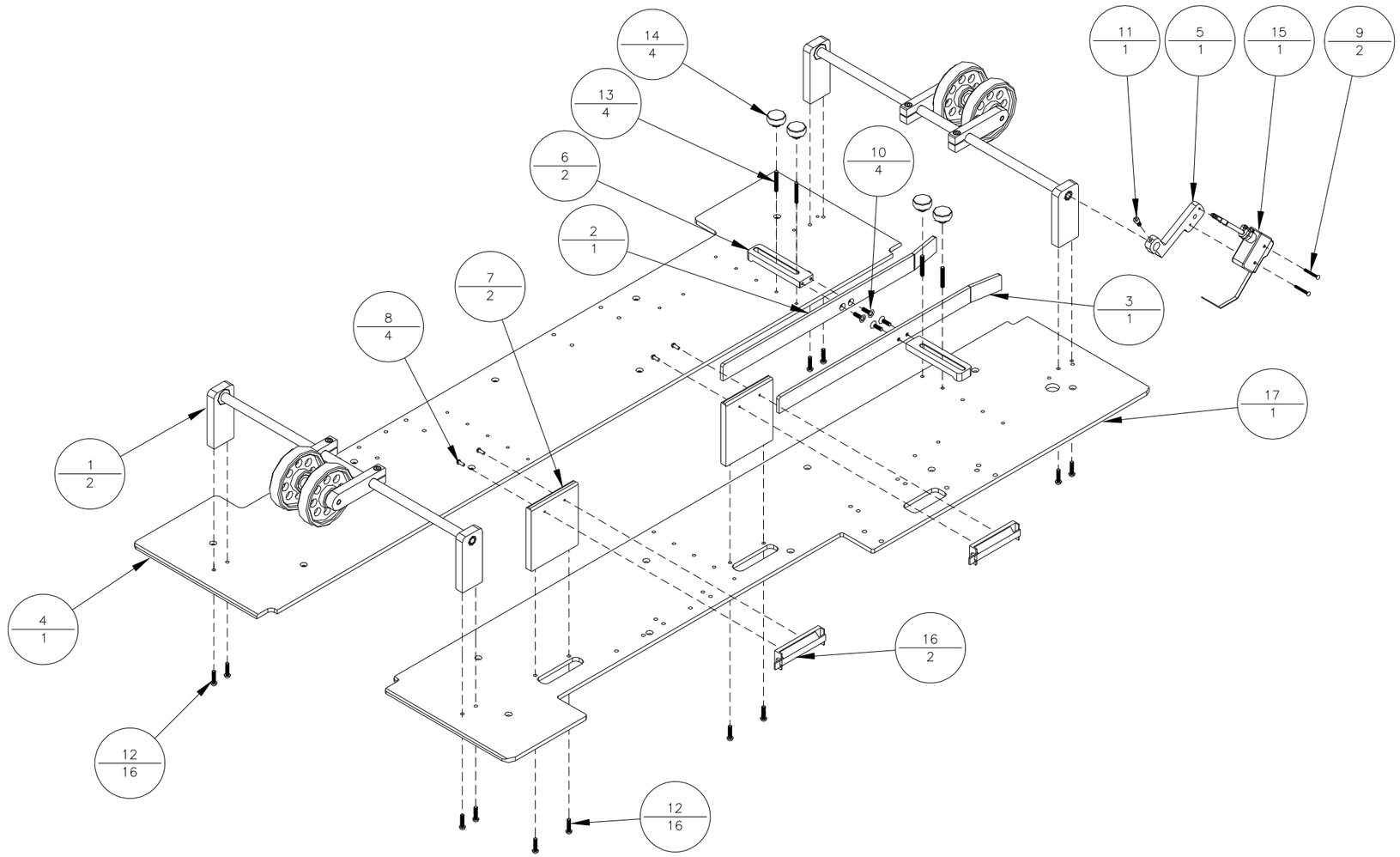

Table A4: *Tabletop Assembly (325461A)*

Item	Part Number	Quantity	Description	Reference
1	100314A	2	Outfeed Roller Shaft Assembly	Page A-21
2	212315	1	Right Material Guide	
3	212316	1	Left Material Guide	
4	325328	1	Inline Right Tabletop	
5	330112W	1	Switch Bracket	
6	330321	2	Side Guide Bracket	
7	330323	2	Ribbon Cable Mount	
8	402320	4	Screw, PHMS, 6-32 UNC X 3/8"	
9	402370	2	Screw, PHMS, 6-32 UNC X 1"	
10	404030	4	Screw, FHCS, 10-32 UNF X 1/2"	
11	404220	1	Screw, SHCS, 10-32 UNF X 3/8"	
12	404550	12	Screw, BHCS, 10-32 UNF X 3/4"	
13	404875	4	Screw, SHSS, 10-32 UNF X 1 1/4"	
14	438110	4	Side Guide Knob	
15	603020A	1	Jam Stop Microswitch	Page A-20
16	609300	2	Ribbon Cable Tie Mount	
17	9100297	1	Inline Left Tabletop	

Figure A5: *Instrument Panel Assembly, (603415A)*

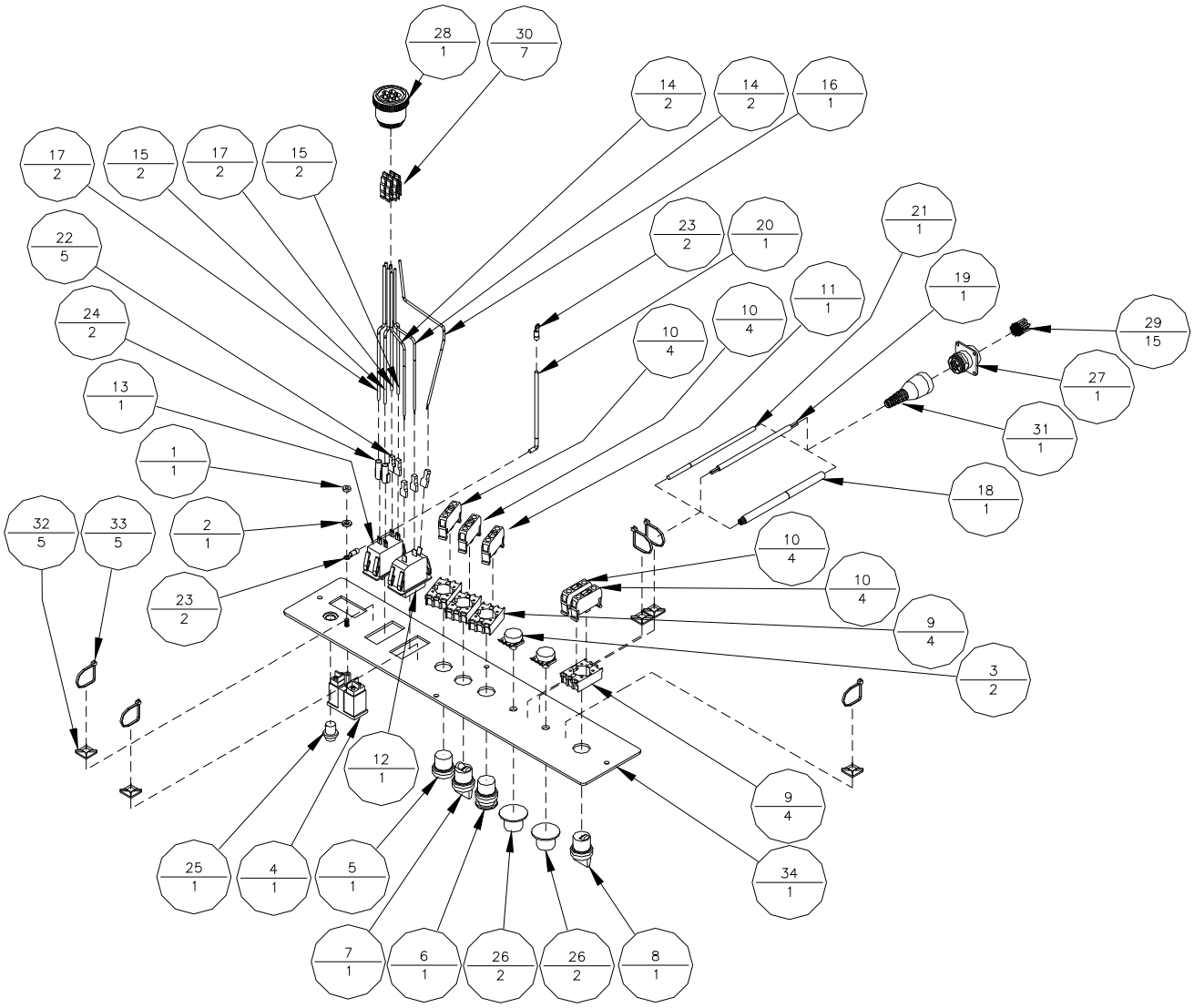

Table A5: *Instrument Panel Assembly (603415A)*

Item	Part Number	Quantity	Description	Reference
1	420008	1	Nut, 10-32 UNF	
2	439010	1	Lockwasher, 1/4" I.D.	
3	600011	2	Potentiometer, W/DART 600005	
4	600100	1	Counter	
5	603120	1	Switch, Green Push Button	
6	603121	1	Switch, Red, Mushroom, Push Button	
7	603122	1	Switch, 2 Position Rotary Knob	
8	603123	1	Switch, 3 Position Rotary Knob	
9	603125	4	Switch Locking Collar COLLAR	
10	603126	4	Block, N.O. Contact	
11	603127	1	Block, N.C. Contact	
12	603300	1	Circuit Breaker Switch, 5 A, 1 Pole, 115VAC	
13	603415	1	Circuit Breaker Switch, 15 A, 2 Pole, 115VAC	
14	606000	2	Wire, #16, Black, Hookup, 32"	
15	606008	2	Wire, #14, White, Hookup, 32"	
16	606009	1	Wire, #16, White, Hookup, 32"	
17	606010	2	Wire, #14, Black, Hookup, 32"	
18	606016	1	Cable, #22-15, Shielded, 30"	
19	606030	1	Cable, #18-3, Unshielded, 28"	
20	606360	1	Wire, #10, Green/Yellow Hookup, 18"	
21	606531	1	Cable, #22-2, Shielded, 32"	
22	609110	5	Connector, Push-On	
23	609111	2	Ring Tongue Terminal	
24	609113	2	Terminal	
25	612101	1	Pilot Light, Green, 250V, 1/2W	
26	613002	2	Knob, 36mm Skirted	
27	614101	1	Receptacle, 17-16	
28	614105	1	Receptacle Plug, 23-7	
29	614107	15	Male Contact, Pin, Yellow	
30	614109	7	Male Contact, Pin	
31	614111	1	Cable Boot Flexible	
32	615100	5	Adhesive Backed Tie Mount	
33	615140	5	Lashing Tie	
34	706335	1	Instrument Panel Plate	

Figure A6: *Photocue Sensor Assembly, (630002A)*

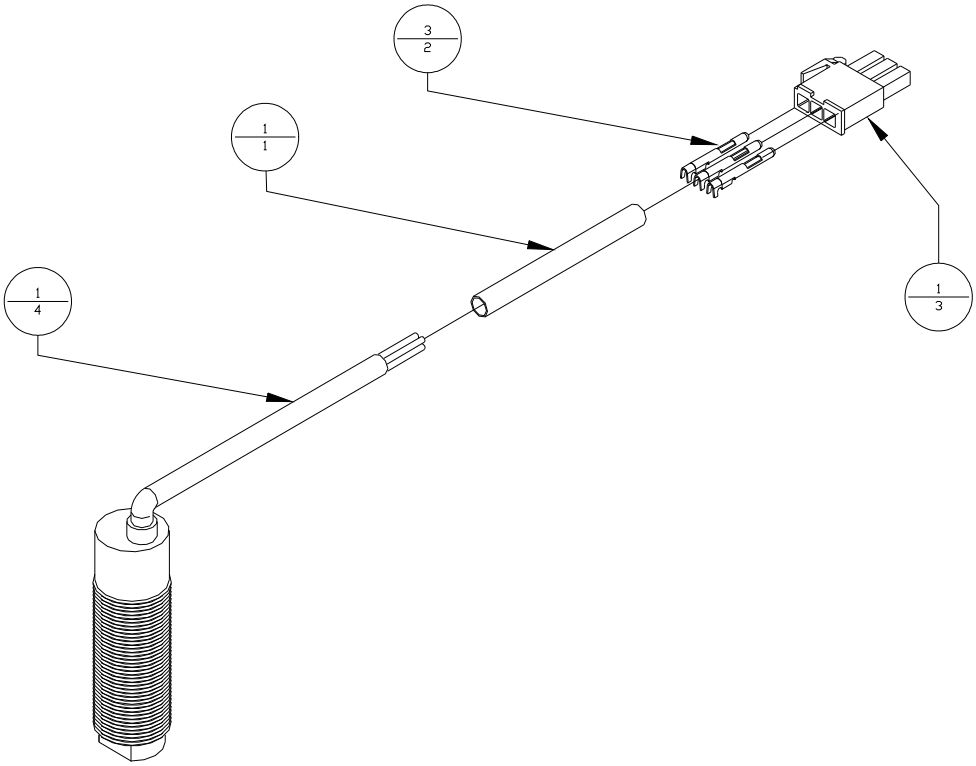

Table A6: *Photocue Sensor Assembly (630002A)*

Item	Part Number	Quantity	Description	Reference
1	609000	1	Shrink Wrap, 3/16" I.D.	
2	614000	3	Male Contact, Pin	
3	614001	1	Plug, Cap Pin Housing	
4	630002	1	Photoelectric Switch	

Figure A7: *Mainshaft Assembly,(116301A)*

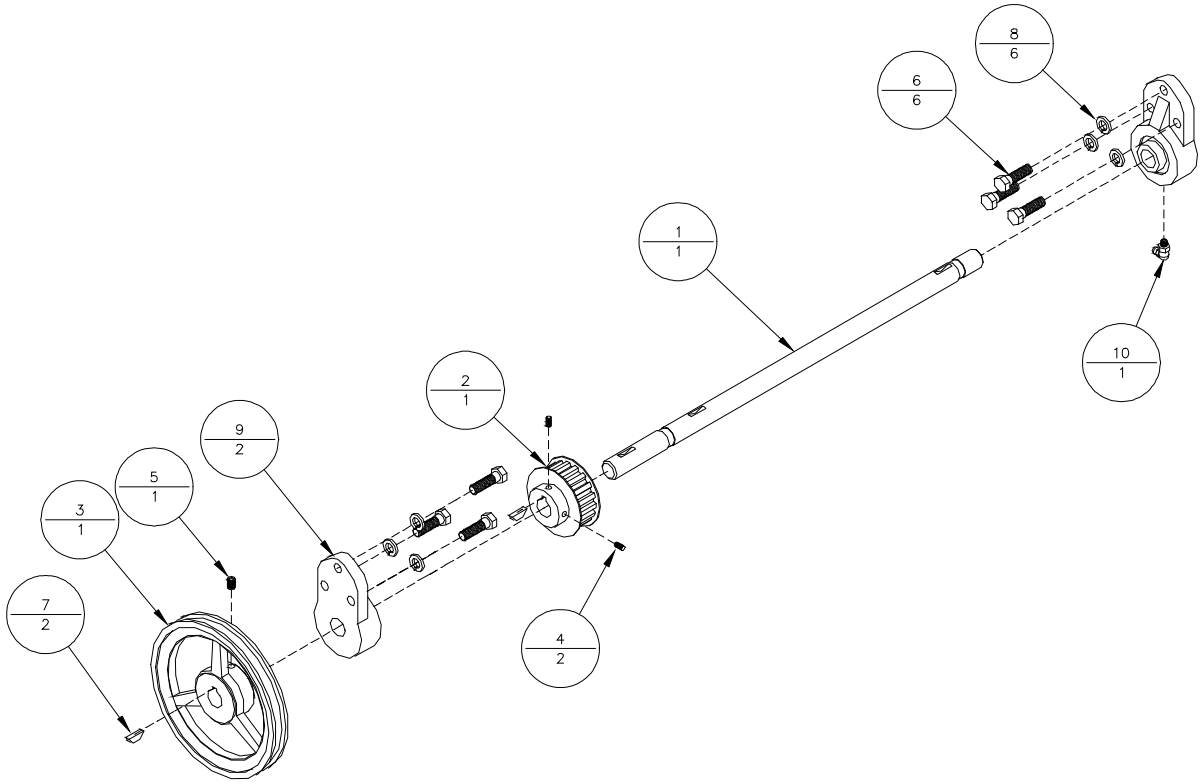

Table A7: *Mainshaft Assembly (116301A)*

Item	Part Number	Quantity	Description	Reference
1	100320	1	Mainshaft	
2	116301	1	Pulley, 18LB075 x 3/4"	
3	116305	1	Sheave, AK64 x 3/4"	
4	404820	2	Screw, SHSS, 10-32 UNF X 3/8"	
5	406820	1	Screw, SHSS, 5/16-18 UNC X 3/8"	
6	407675	6	Screw, HHMS, 3/8-16 UNC X 1 1/4"	
7	430250	2	Woodruff Key, #606, 3/16 X 3/4"	
8	439020	6	Lockwasher, 3/8" I.D.	
9	500300	2	Bearing, UCFK204-12S, 3/4 I.D.	
10	802204	1	Grease Fitting, 90deg, 1/4-28	

Figure A8: *Left Sideframe Assembly, (300332A)*

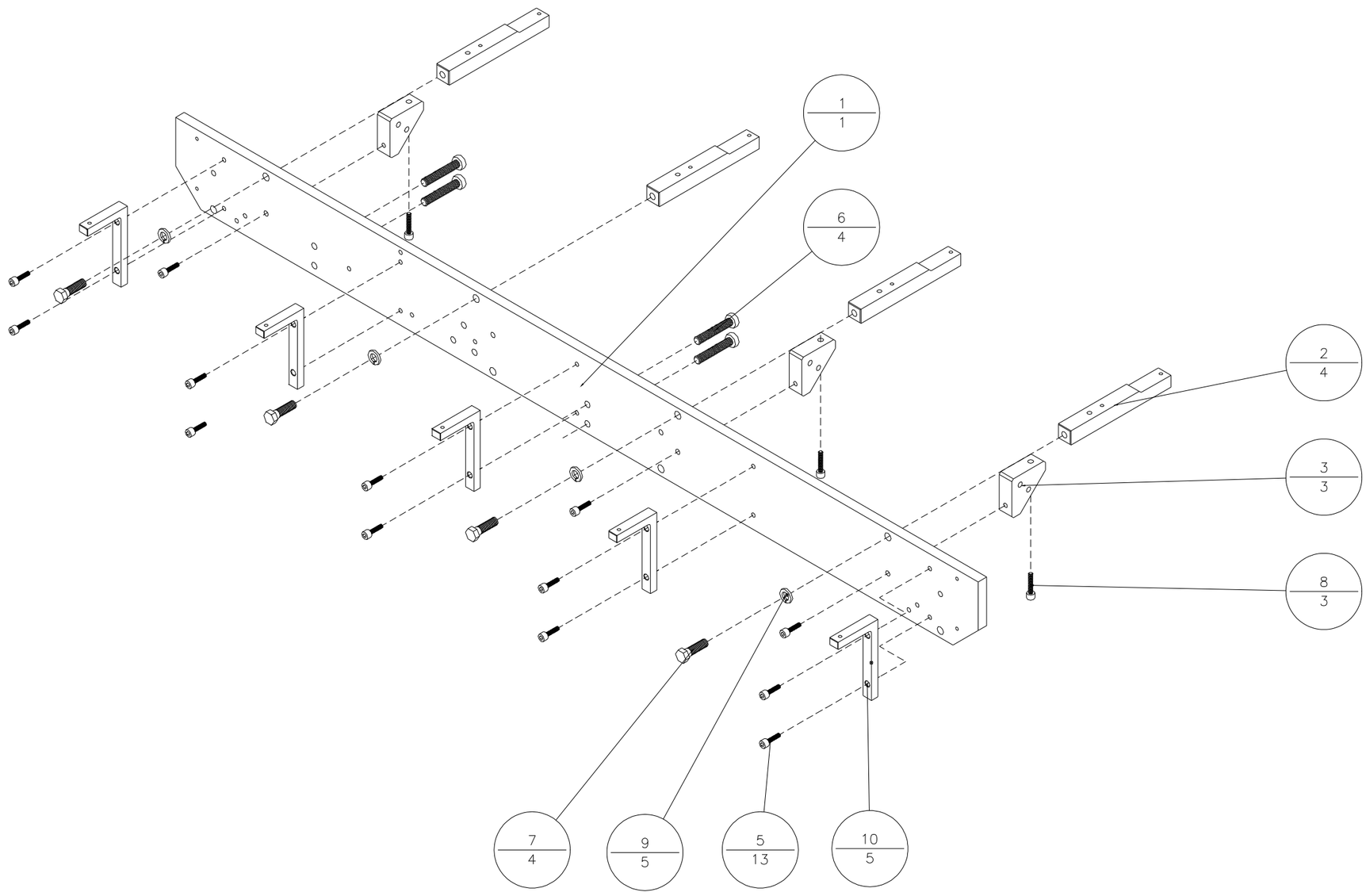

Table A8: *Left Sideframe Assembly (300332A)*

Item	Part Number	Quantity	Description	Reference
1	300330	1	Inline base Sideframe	
2	300332	4	Tabletop Support	
3	310322	3	Angle Bracket	
5	405250	13	Screw, SHCS, 1/4-20 UNC X 3/4"	
6	407285	4	Screw, SHCS, 3/8-16 UNC X 2"	
7	407675	4	Screw, HHMS, 3/8-16 UNC X 1 1/4"	
8	405270	3	Screw, SHCS, 1/4-20 UNC x 1"	
9	439020	5	Lockwasher, 3/8" I.D.	
10	330013	5	Skirt Support	

Figure A9: *Right Sideframe Assembly, (300331A)*

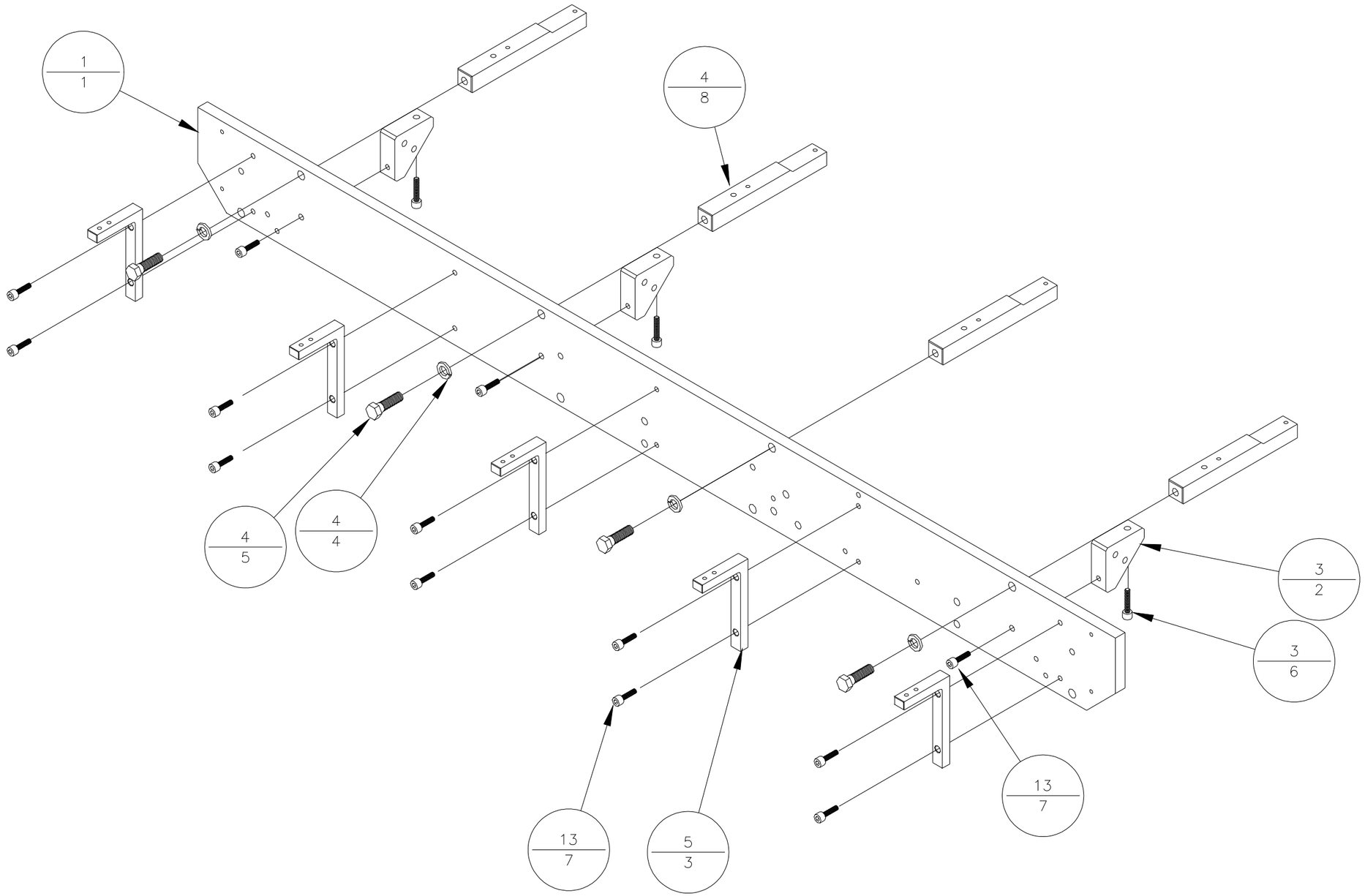

Table A9: *Right Sideframe Assembly (300331A)*

Item	Part Number	Quantity	Description	Reference
1	300330	1	Inline Base Sideframe	
2	310322	3	Angle Bracket	
3	330013	5	Skirt Support	
4	439020	4	Lockwasher, 3/8" I.D.	
5	407675	4	Screw, HHMS, 3/8-16 UNC X 1 1/4"	
6	405270	3	Screw, SHCS, 1/4-20 UNC X 1"	
7	405250	13	Screw, SHCS, 1/4-20 UNC X 3/4"	
8	300332	4	Tabletop Support	

Figure A10: *Vacuum Belt Tabletop Assembly, (325331A)*

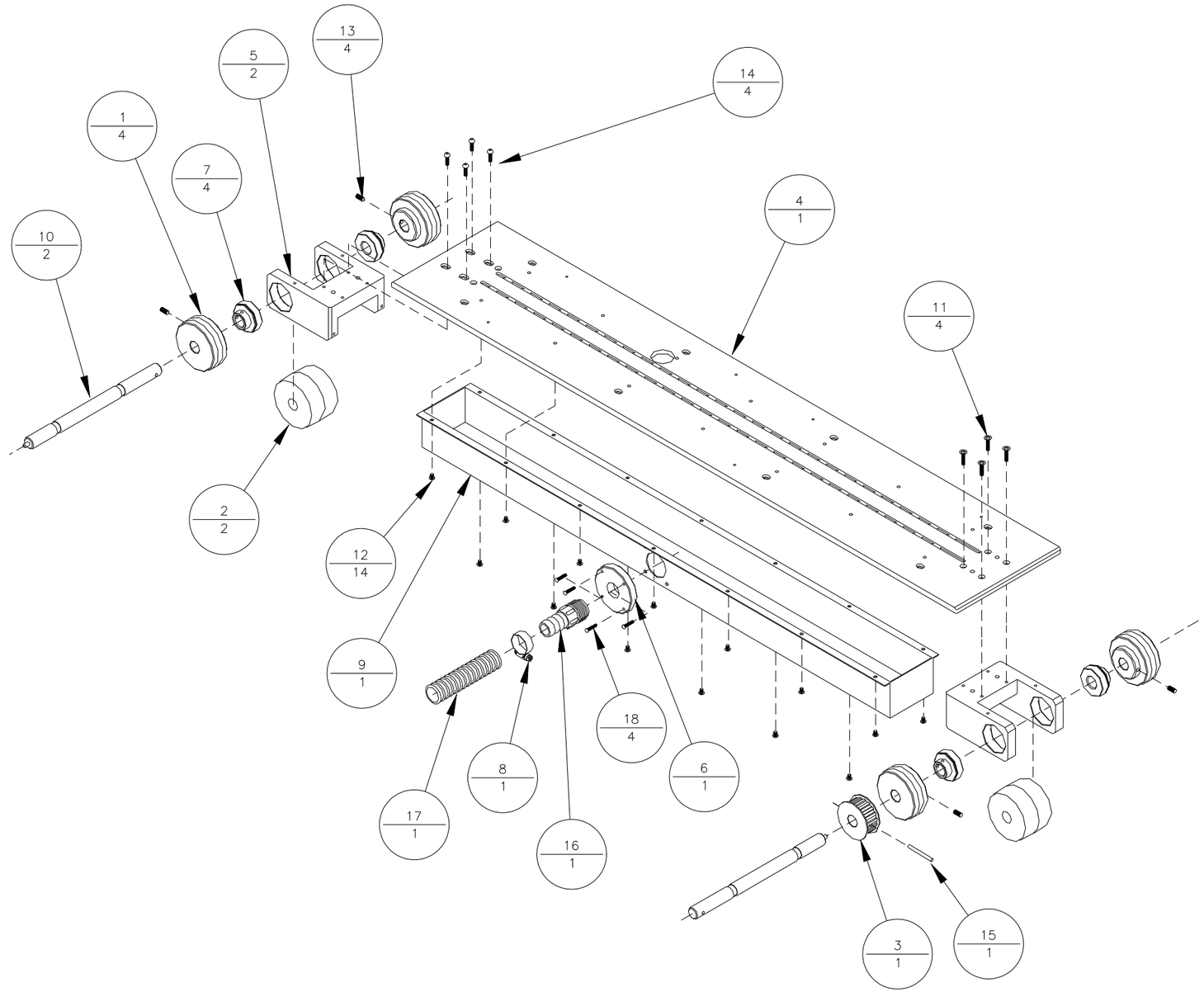

Table A10: *Vacuum Belt Assembly (325331A)*

Item	Part Number	Quantity	Description	Reference
1	106301	4	Vacuum Belt Drive Pulley	
2	106321	2	Vacuum Belt Pulley, 2"	
3	116309	1	Pulley, 18LB075 X 3/4" w/o Shoulder	
4	325330	1	Vacuum Belt Tabletop	
5	330306	2	Drive Pulley Block	
6	330608	1	Blower Hose Block	
7	500055	4	Bearing, UBR204-12S, 3/4 I.D.	
8	444004	1	Hose Clamp, Gear Type, 9/16 1 1/4	
9	700601	1	Vacuum Chamber	
10	9100458	2	Transport Belt Driveshaft	
11	404050SS	4	Screw, FHCS, 10-32 UNF X 3/4" SS	
12	404510	14	Screw, BHCS, 10-32 UNF X 5/8"	
13	405830	4	Screw, SHSS, 1/4-20 UNC X 1/2"	
14	404540	4	Screw, BHCS, 10-32 UNF X 5/8"	
15	436049	1	Spring Pin, 3/16" DIA X 1 7/8"	
16	802111	1	Hose Barb, 1" X 1", Plastic	
17	802601	1	Vacuum Tubing, Grey PVC, 1"	
18	402350	4	Screw, PHMS, 6-32 UNF X 3/4"	

Figure A11: *Shaft Encoder Assembly, (9100188A)*

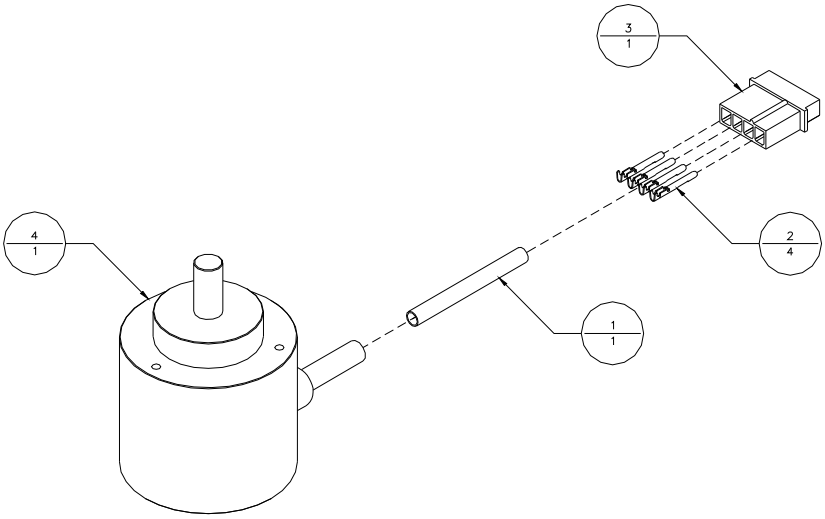

Table A11: *Shaft Encoder Assembly (9100188A)*

Item	Part Number	Quantity	Description	Reference
1	609000	1	Shrink Wrap, 3/16" I.D.	
2	614008	4	Male Contact, Pin	
3	614009	1	Plug, Pin Housing	
4	9100188	1	Shaft Encoder	

Figure A12: *Jam Stop Microswitch Assembly, (603020A)*

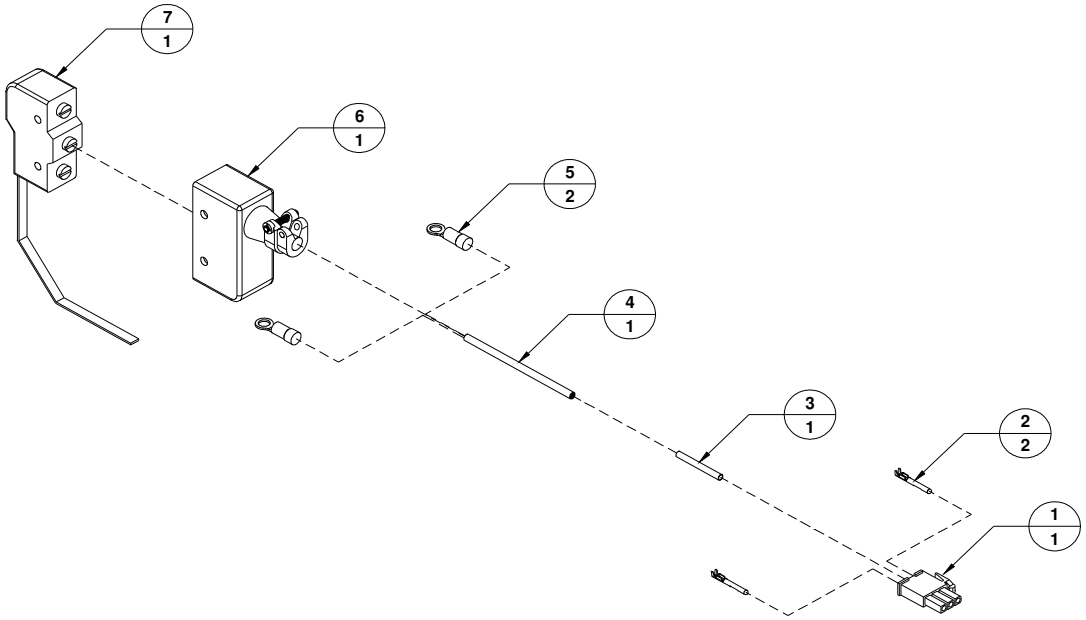

Table A12: *Jam Stop Microswitch Assembly (603020A)*

Item	Part Number	Quantity	Description	Reference
1	614001	1	Plug, Cap Pin Housing	
2	614000	2	Male Contact, Pin	
3	609000	1	Shrink Wrap, 3/16” ID	
4	606531	1	Cable, #22-2, Unshielded, 20”	
5	609111	2	Ring Tongue Terminal	
6	603021	1	Microswitch Cover	
7	603020	1	Microswitch	

Figure A13: *Outfeed Roller Assembly, (100314A)*

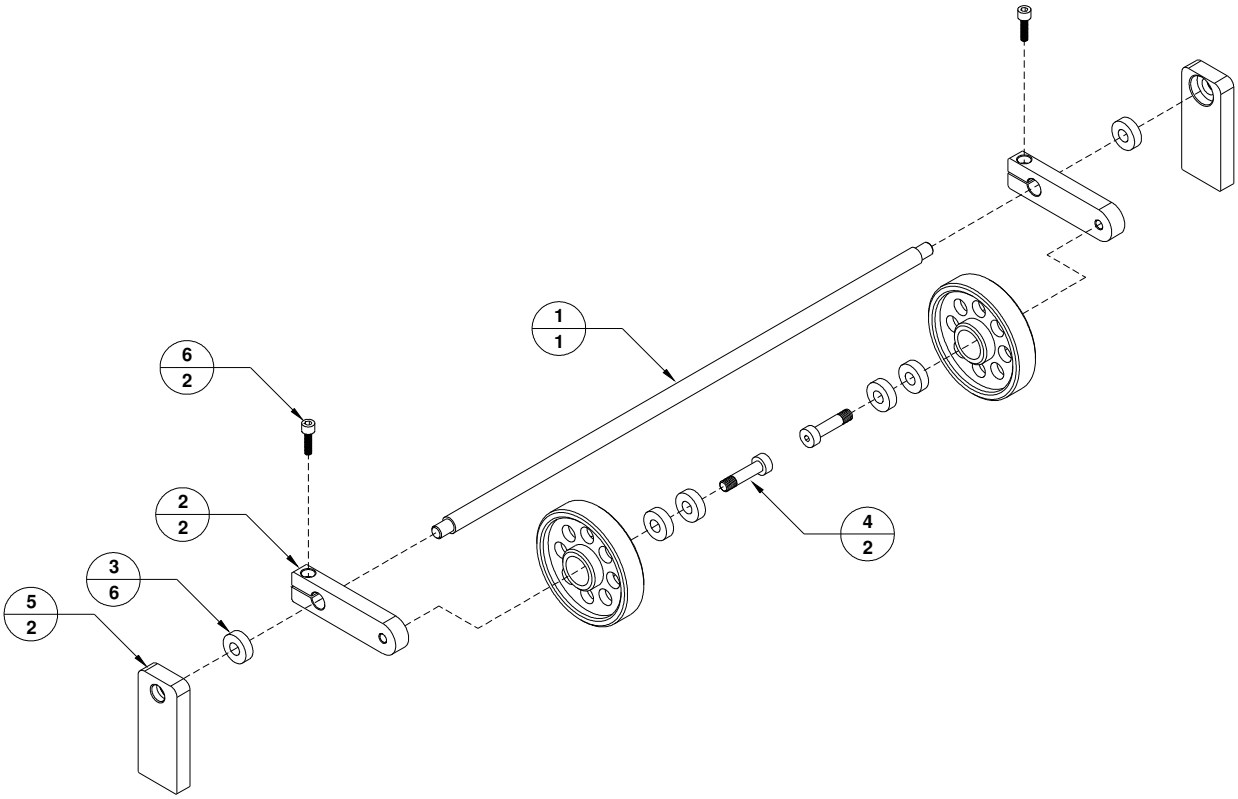

Table A13: *Outfeed Roller Assembly (100314A)*

Item	Part Number	Quantity	Description	Reference
1	100314	1	Outfeed Roller Shaft	
2	203302	2	Outfeed Roller Arm	
3	500020	6	Bearing, R6, 3/8” ID	
4	416170	2	Shoulder Bolt, 3/8” x 1” (5/16-18 UNC)	
5	330309	2	Outfeed Roller Bracket	
6	405250	2	Screw, SHCS, ¼-20 UNC x ¾”	

Figure A14: *Regenerative Blower Assembly, (801105A)*

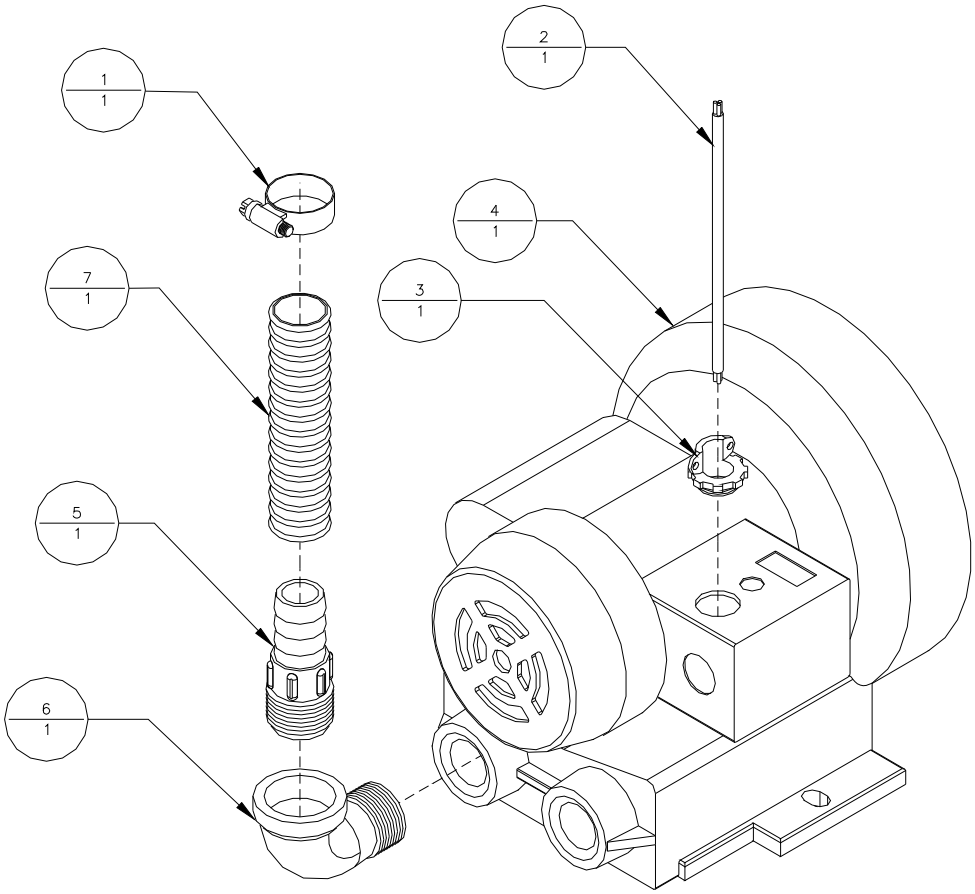

Table A14: *Regenerative Blower Assembly (801105A)*

Item	Part Number	Quantity	Description	Reference
1	444004	1	Hose Clamp, Gear Type, 9/16 - 1 1/4	
2	606034	1	Cable, #16-3, SJOW-A, 60"	
3	615131	1	Box Connetor, 3/8", Cable	
4	801104	1	Regenerative Blower	
5	802111	1	Hose Barb, 1" X 1", Plastic	
6	802122	1	Street Elbow, 90d, Black	
7	802601	1	Vacuum Tubing, Grey PVC, 1", 48"	

Figure A15: *Motor Assembly, (800002A)*

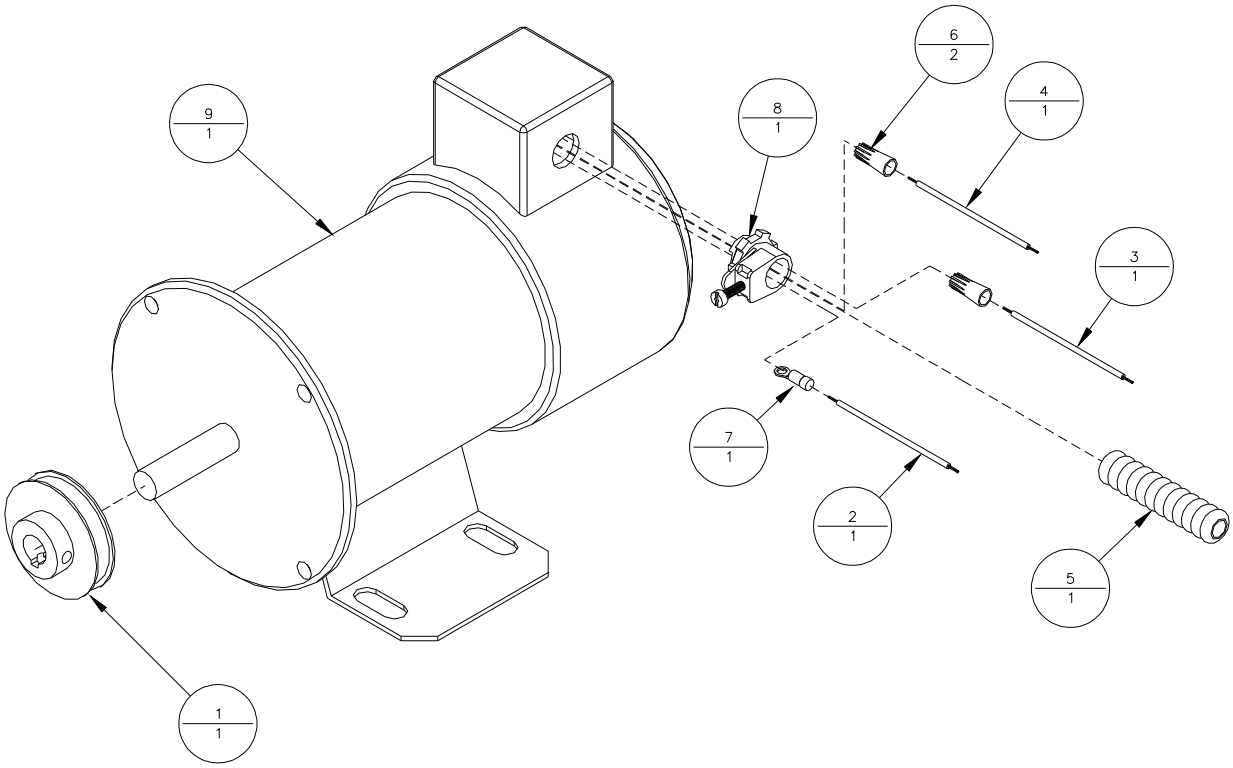

Table A15: *Motor Assembly (800002A)*

Item	Part Number	Quantity	Description	Reference
1	116007	1	Sheave, AK25 X 5/8"	
2	606000	1	Wire, #16, Black, Hookup, 78”	
3	606005	1	Wire, #16, Green, Hookup, 40”	
4	606009	1	Wire, #16, White, Hookup, 78	
5	609100	1	Conduit, Black, 3/8", 24	
6	609101	2	Marette, Orange, 14-22	
7	609111	1	Ring Tongue Terminal	
8	615130	1	Box Connector, 3/8", Conduit	
9	800002	1	Motor, 1/2 H.P., 90 VDC	

Figure A16: *Inline Remote Cable, (614135A)*

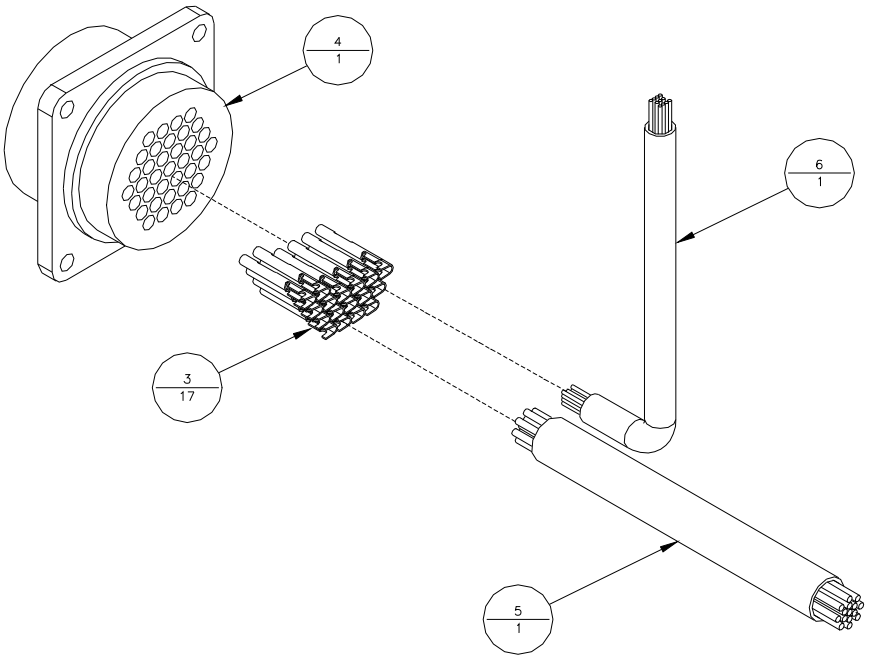

Table A16: *Inline Remote Cable (614135A)*

Item	Part Number	Quantity	Description	Reference
3	614108	17	Female Contact, Socket	
4	614135	1	Receptacle, 23-37, Square Flanged	
5	606016	1	Cable, #22-15, Shielded, 85”	
6	606018	1	Cable, #22-10, Unshielded, 85”	

Figure A17: *Jam/Proximity/Photo Cable, (614061A)*

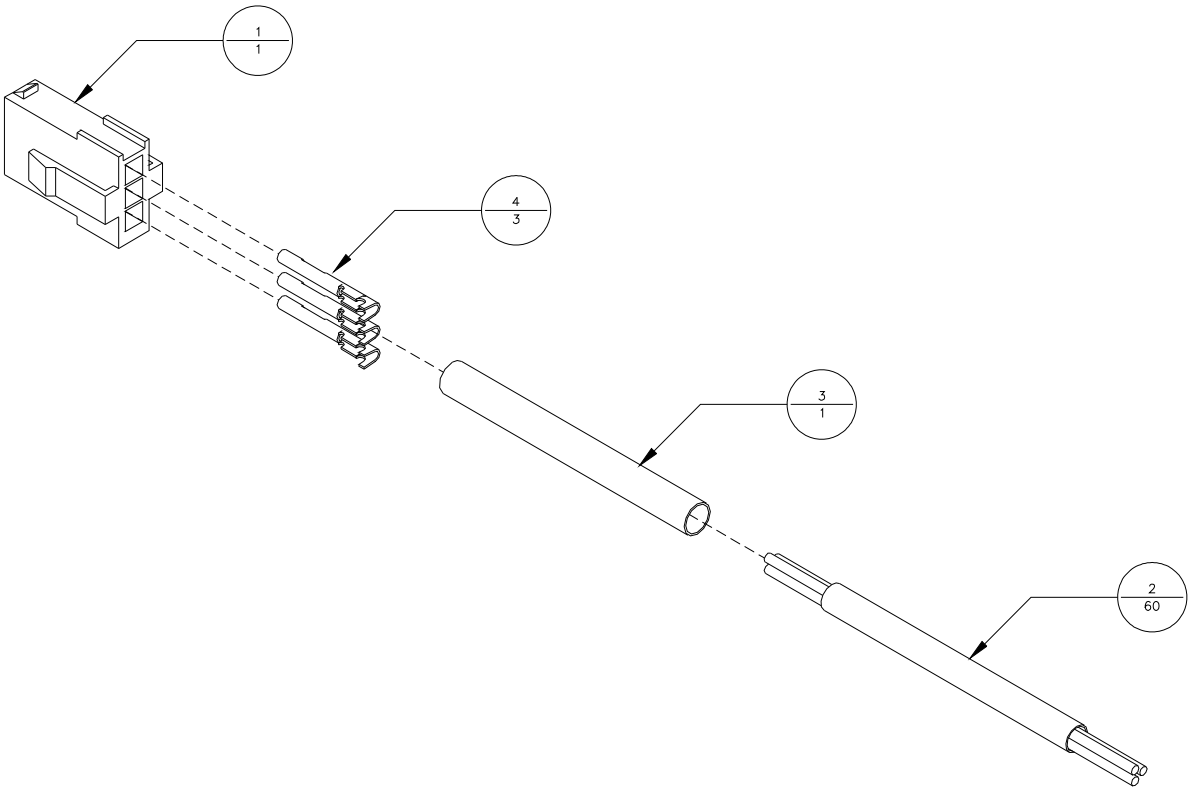

Table A17: *Jam/Proximity/Photo Cable (614061A)*

Item	Part Number	Quantity	Description	Reference
1	614003	1	Cap Receptacle	
2	606013	1	Cable, #22-3, Shielded, 60”	
3	609000	1	Shrink Wrap, 3/16" I.D.	
4	614002	3	Female Contact, Socket	

Figure A18: *Conveyor Cable, (614056A)*

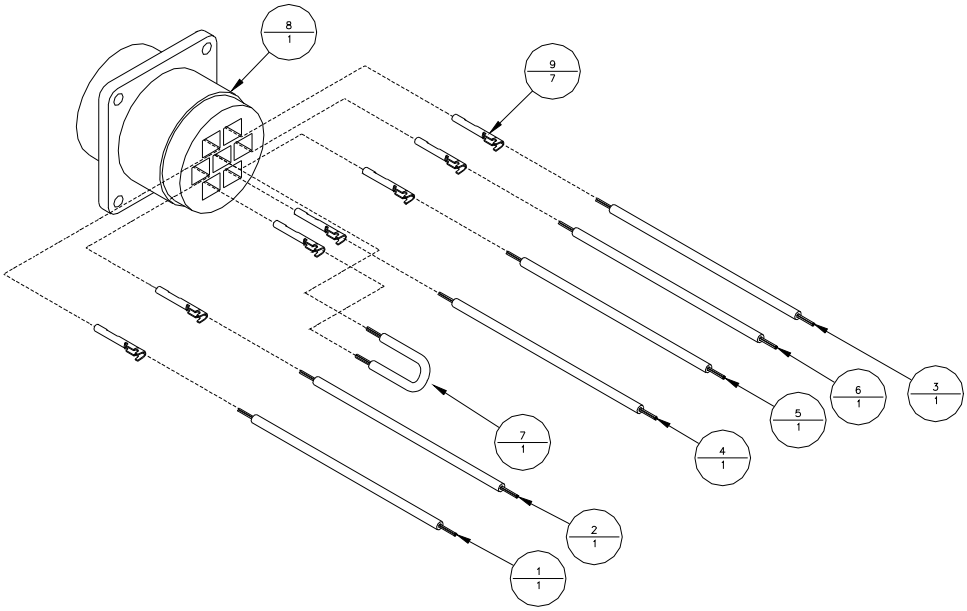

Table A18: *Conveyor Cable (614056A)*

Item	Part Number	Quantity	Description	Reference
1	606000	1	Wire, #16, Black, Hookup, 90"	
2	606005	1	Wire, #16, Green, Hookup, 80"	
3	606009	1	Wire RE, #16, White, Hookup, 90"	
4	606021	1	Wire, #16, Brown, Hookup, 80"	
5	606022	1	Wire, #16, Red, Hookup, 80"	
6	606026	1	Wire, #16, Blue, Hookup, 80"	
7	606000	1	Wire, #16, Black, Hookup, 3" Jumper	
8	614106	1	Receptacle, 23-7	
9	614110	7	Female Contact, Socket	

Figure A19: *Instrument Control Cable, (614051A)*

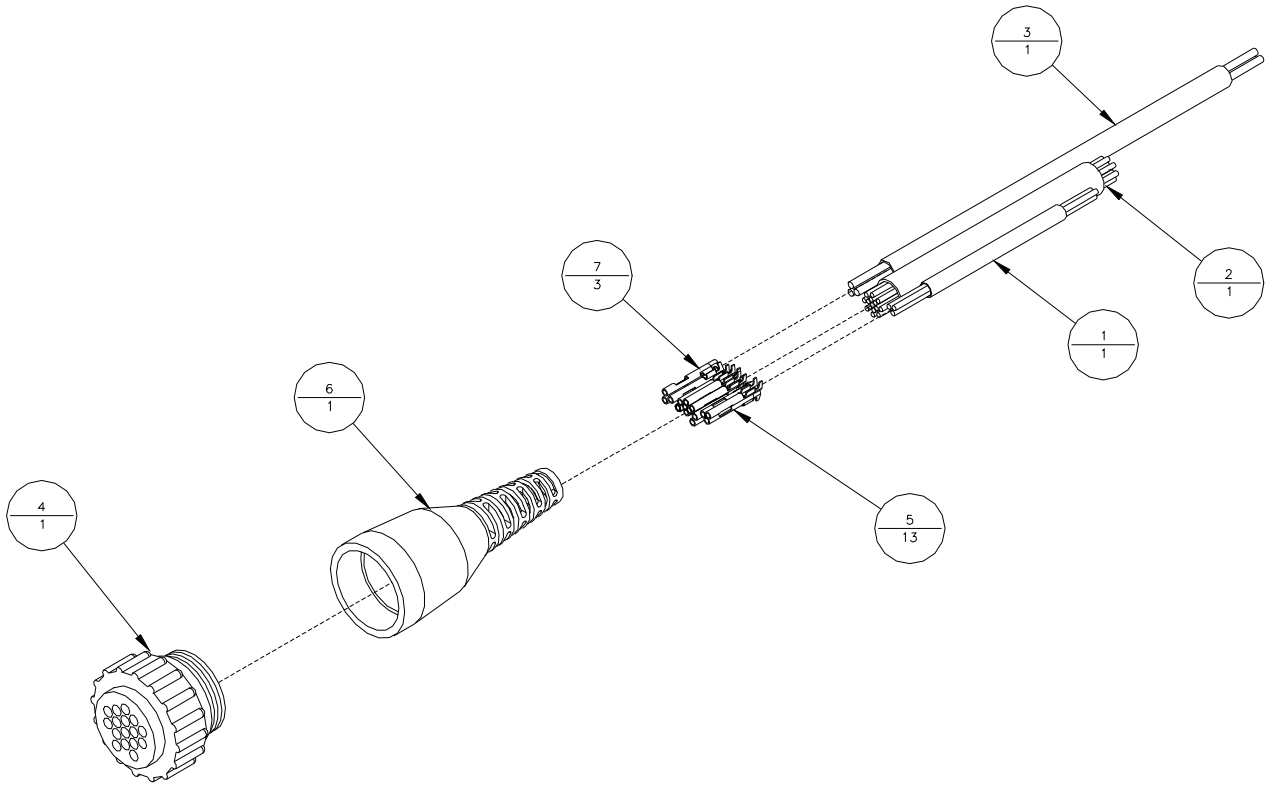

Table A19: *Instrument Control Cable (614051A)*

Item	Part Number	Quantity	Description	Reference
1	606013	1	Cable, #22-3, Shielded, 70"	
2	606016	1	Cable, #22-15, Shielded, 90"	
3	606030	1	Cable, #18-3, Unshielded, 60"	
4	614103	1	Plug, Female, 17-16	
5	614108	13	Female Contact, Socket, Yellow	
6	614111	1	Cable Boot, Fexible	
7	614123	3	Socket Contact, Female, Blue	

Figure A20: *Main Power Cable, (614050A)*

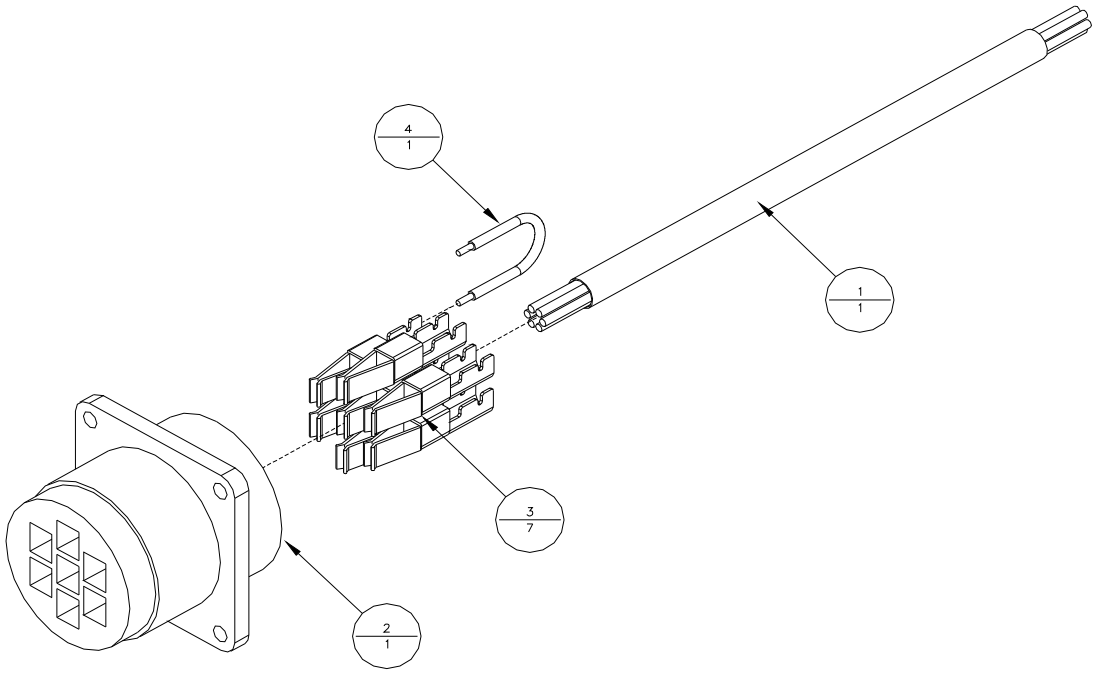

Table A20: *Main Power Cable (614050A)*

Item	Part Number	Quantity	Description	Reference
1	606052	1	Cable, #14-7, Unshielded, 60"	
2	614106	1	Receptacle, 23-7	
3	614110	7	Female Contact, Socket	
4	PART1	1	Jumper Cable, White/Black	

Figure A21: *Base Power Cable, (614015A)*

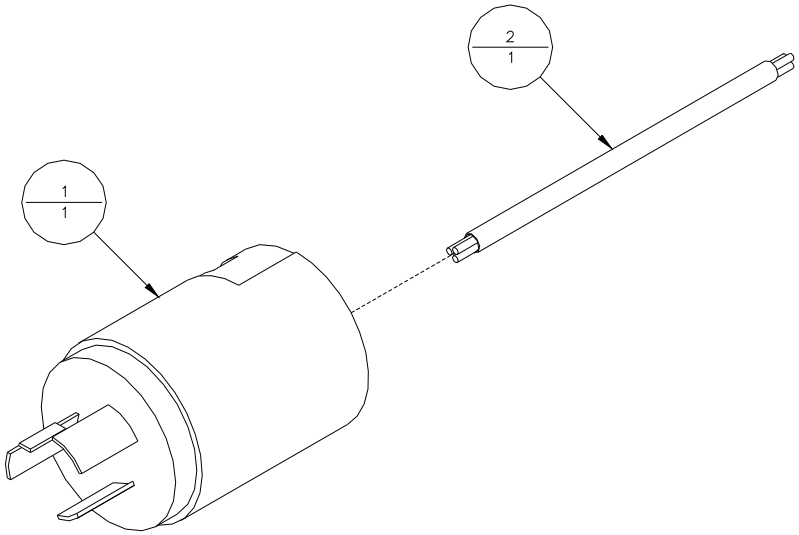

Table A21: *Base Power Cable (614015A)*

Item	Part Number	Quantity	Description	Reference
1	614015	1	Twist-Lock Plug, 20A, 250V	
2	606033	1	Cable, #14-3, SJOW-A	

Figure A22: *Shaft Encoder Cable, (606300A)*

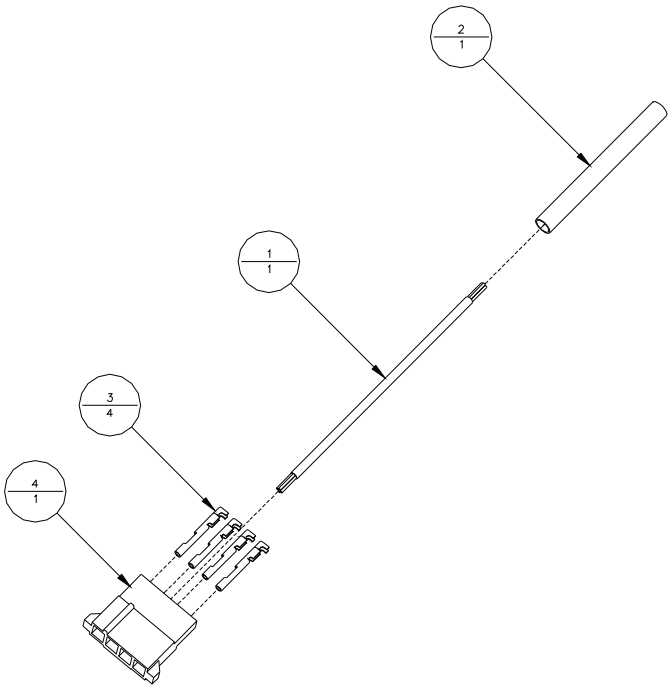

Table A22: *Shaft Encoder Cable (606300A)*

Item	Part Number	Quantity	Description	Reference
1	606014	1	Cable, #22-4, Shielded, 58"	
2	609000	1	Shrink Wrap, 3/16" I,D,	
3	614006	4	Female Contact, Socket	
4	614007	1	Socket Housing	

Figure A23: *Inline Base Electrical Box Assembly, (706463A)*

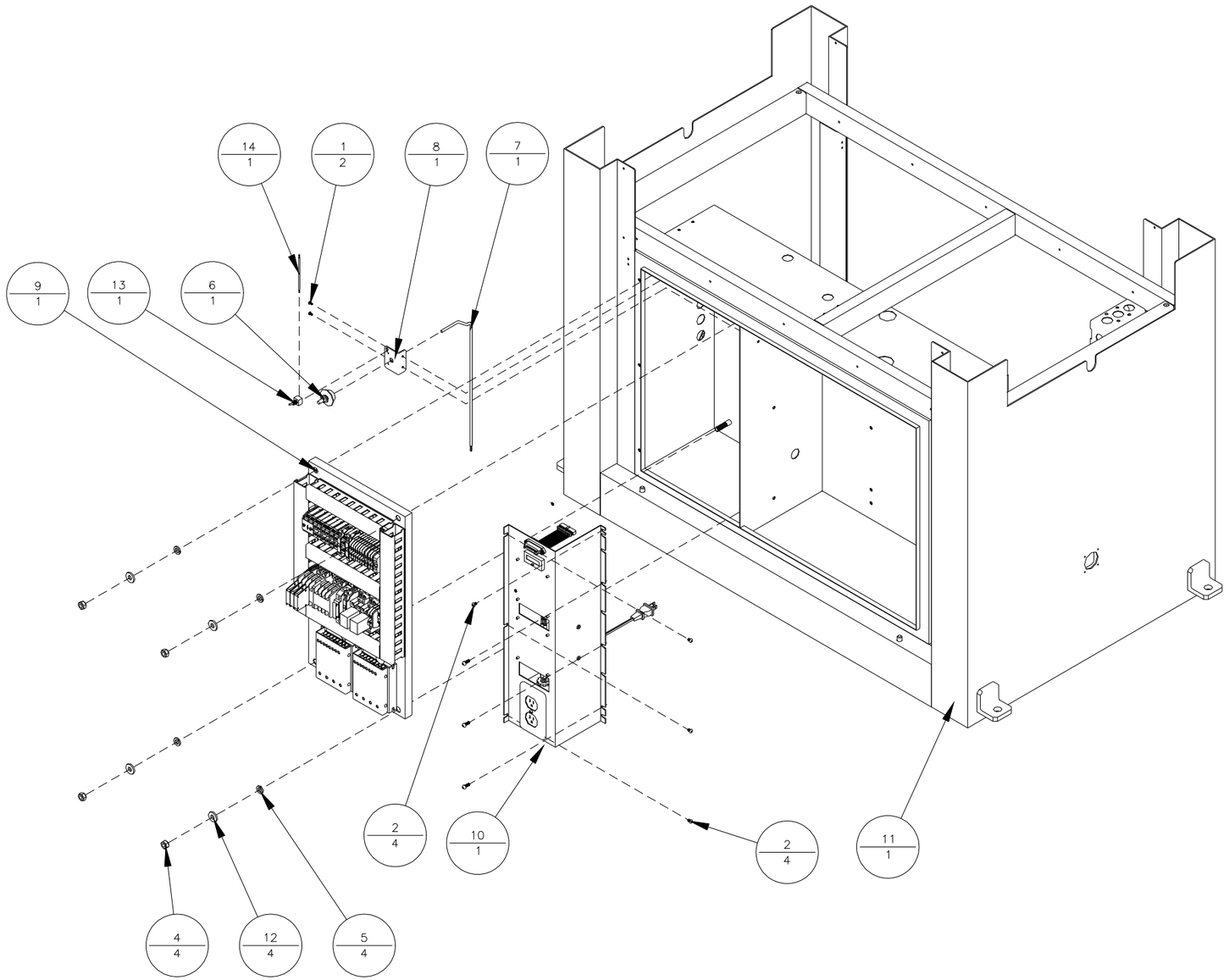

Table A23: *Inline Base Electrical Box Assembly (706463A)*

Item	Part Number	Quantity	Description	Reference
1	402510	2	Screw, BHCS, 6-32 UNC X 1/4"	
2	404510	4	Screw, BHCS, 10-32 UNF X 1/4"	
3	404530	3	Screw, BHCS, 10-32 UNF X 1/2"	
4	420020	4	Nut, 3/8-16 UNC	
5	439020	4	Lockwasher, 3/8" I.D.	
6	600007	1	Potentiometer, %K Ohm, 1/4 Watt	
7	606013	1	Cable, #22-3, Shielded, 24”	
8	615005	1	Microswitch Bracket	
9	615462A	1	Base Control Board Assembly	Page A-34
10	706337A	1	Power Supply Mount Board Assembly	Page A-33
11	713333A	1	Base Frame Assembly	
12	440020	4	Washer, 3/8" I.D.	
13	603201	1	Toggle Switch, Double Pole	
14	606014	1	Cable, #22-4, Shielded, 48”	

Figure A24: *Power Supply Mount Board Assembly, (706337A)*

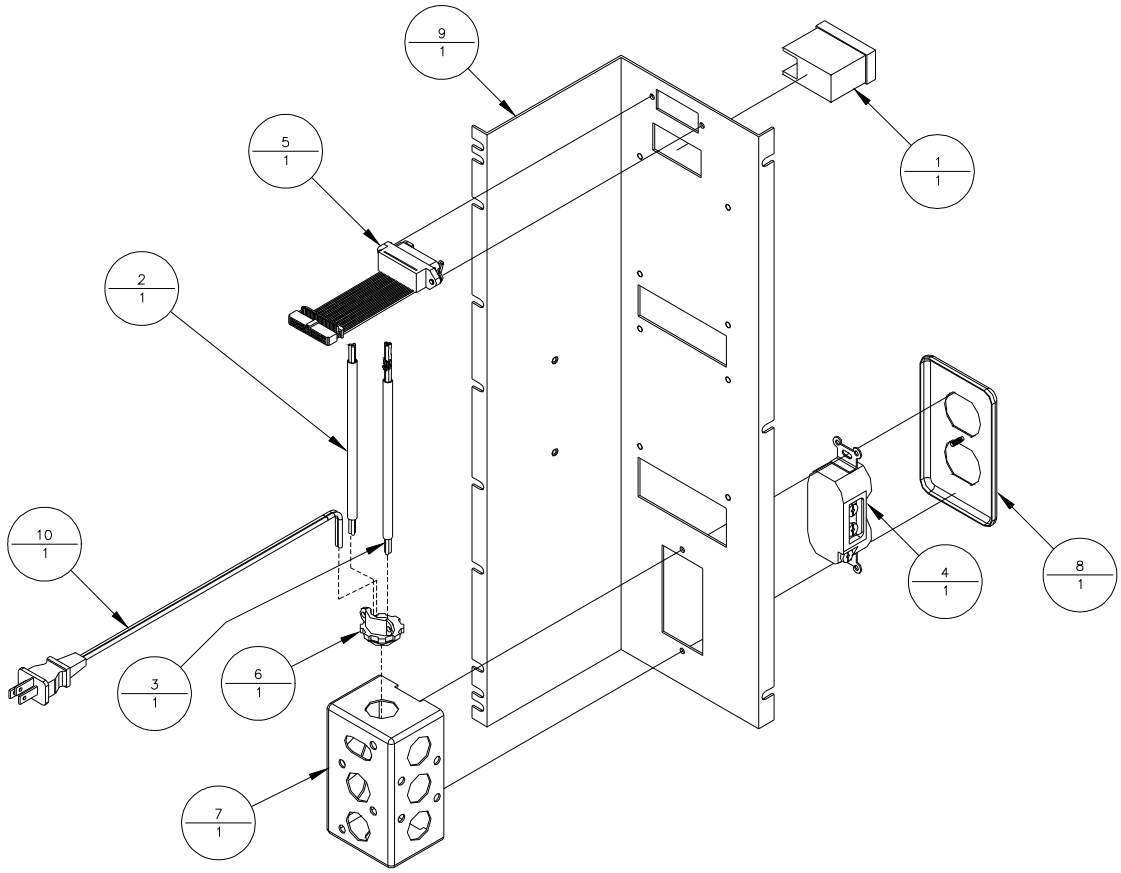

Table A24: *Power Supply Mount Board Assembly (706337A)*

Item	Part Number	Quantity	Description	Reference
1	600101	1	Counter	
2	606030	1	Cable, #18-3 Shielded, 156”	
3	606343A	1	Keypad Power Cable	Page A-40
4	614014	1	Receptacle, Duplex, 2 Pole, 3 Wire GRNDG	
5	614320A	1	Jet Drive I/O Ribbon Cable	Page A-39
6	615131	1	Box Connector, 3/8”, Cable	
7	615150	1	Electrical Junction Box, 2” x 4”	
8	615155	1	Box Conver, Duplex Receptacle	
9	706338	1	Power Supply Mount Board	
10	614120	1	Power Supply Cord, 3 Cond, #18-3 SJT	

Figure A25: *Base Control Board Assembly, (615462A)*

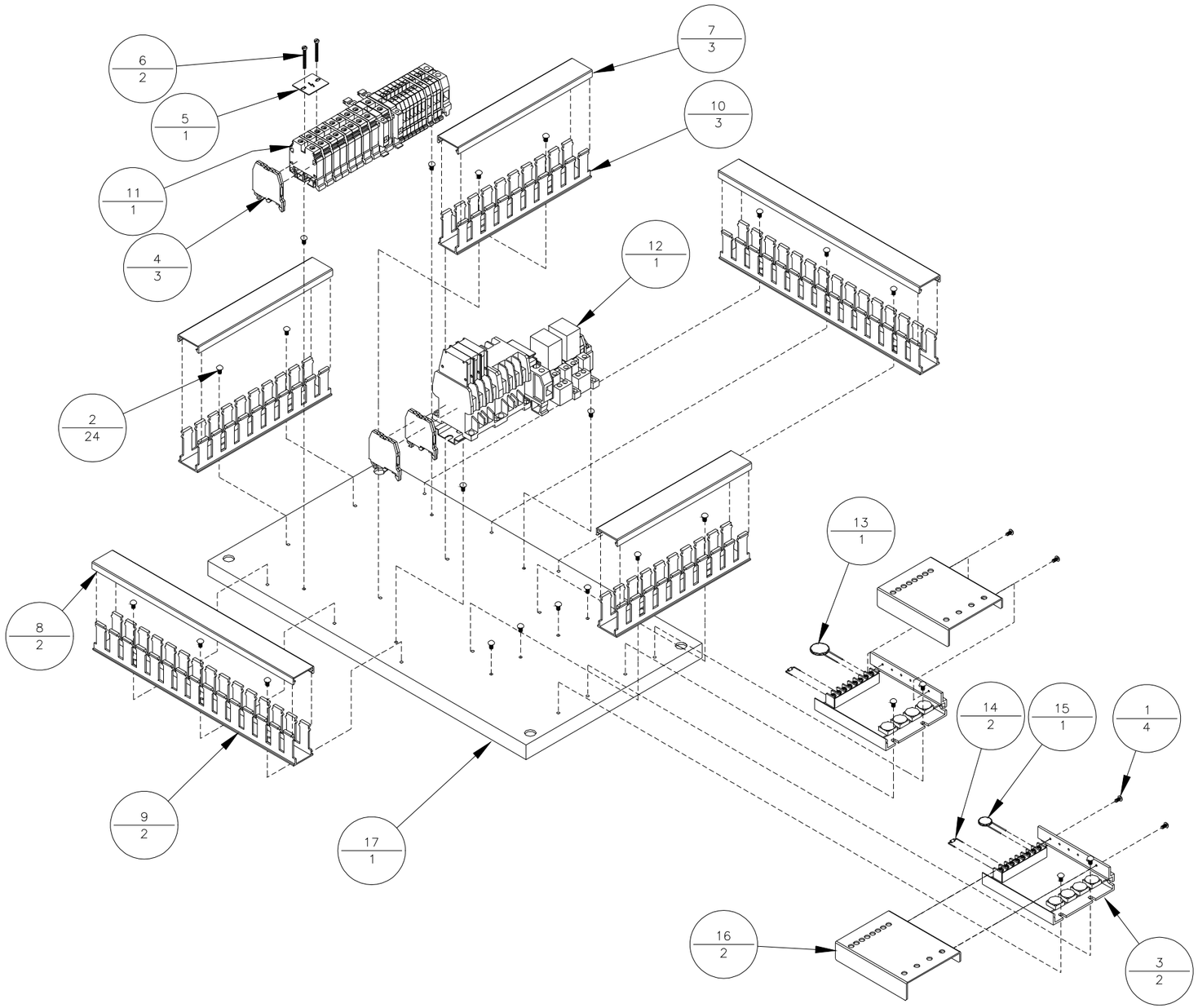

Table A25: *Base Control Board Assembly (615462A)*

Item	Part Number	Quantity	Description	Reference
1	402310	4	Screw, PHMS, 6-32 UNC X 1/4"	
2	403310	24	Screw, PHMS, 8-32 UNC X 1/4"	
3	600005	2	DC Controller, 90 VDC	
4	615017	3	Terminal, EK2.5/35, Ground	
5	615027	1	Marker Card, Protection Label EP8	
6	615028	2	Marker Card Screw	
7	615210	3	Wiring Duct Cover, 1", 8" Length	
8	615210	2	Wiring Duct Cover, 1", 12" Length	
9	615220	2	Wiring Duct, 1" X 1", 12" Length	
10	615220	3	Wiring Duct, 1" X 1", 8" Length	
11	615460A	1	BK460 Terminal Block 1 Assembly	Page A-36
12	615461A	1	BK460 Terminal Block 2 Assembly	Page A-37
13	640300	1	Metal Oxide Varistor, 120 VAC	
14	640301	2	Zener Diode 1N4004	
15	640302	1	Metal Oxide Varistor, 250 VAC	
16	700321	2	Dart Controller Cover	
17	706331	1	Base Control Board	

Figure A26: *Terminal Block 2 Assembly, (615461A)*

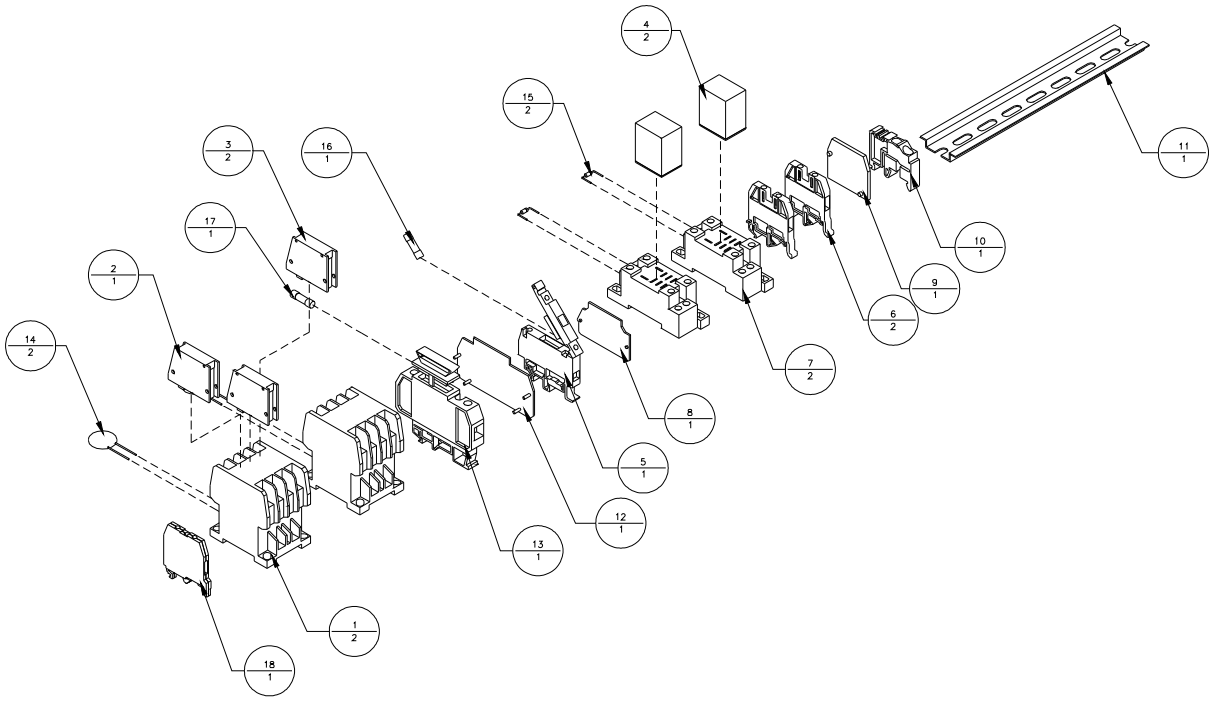

Table A26: *Terminal Block 1 Assembly (615460A)*

Item	Part Number	Quantity	Description	Reference
1	610001	2	Contactor, 3 Pole, 9A, 120V	
2	610002	1	Auxiliary Contact, N.C.	
3	610003	2	Auxiliary Contact, N.O.	
4	610102	2	Relay, 12 VDC	
5	615001	1	Fuse Holder, M4/8, SF2, Grey, 8mm, 6.3 A	
6	615002	2	Terminal Block, M4/6, Grey, 6mm	
7	615004	2	Relay base	
8	615011	1	End Section, FEM8S, Grey, 1.5mm	
9	615012	1	End Section, FEM6, Grey, 2.5mm	
10	615016	1	End Stop, BAM, 9.1mm	
11	615021	1	T Rail, DIN, 8"	
12	615023	1	End Section, FEM13U	
13	615024	1	Fuse Holder, MU10/13.SF.1, 10mm, 16 A 60	
14	640300	2	Metal Oxide Varistor, 120 VAC	
15	640301	2	Zener Diode, 1N4004	
16	646001	1	Fuse, 5 X 20, 5 A	
17	646002	1	Fuse, 5 X 20, 10 A	
18	615017	1	Terminal, EK2.5/35, Ground	

Figure A27: *Terminal Block 1 Assembly, (615460A)*

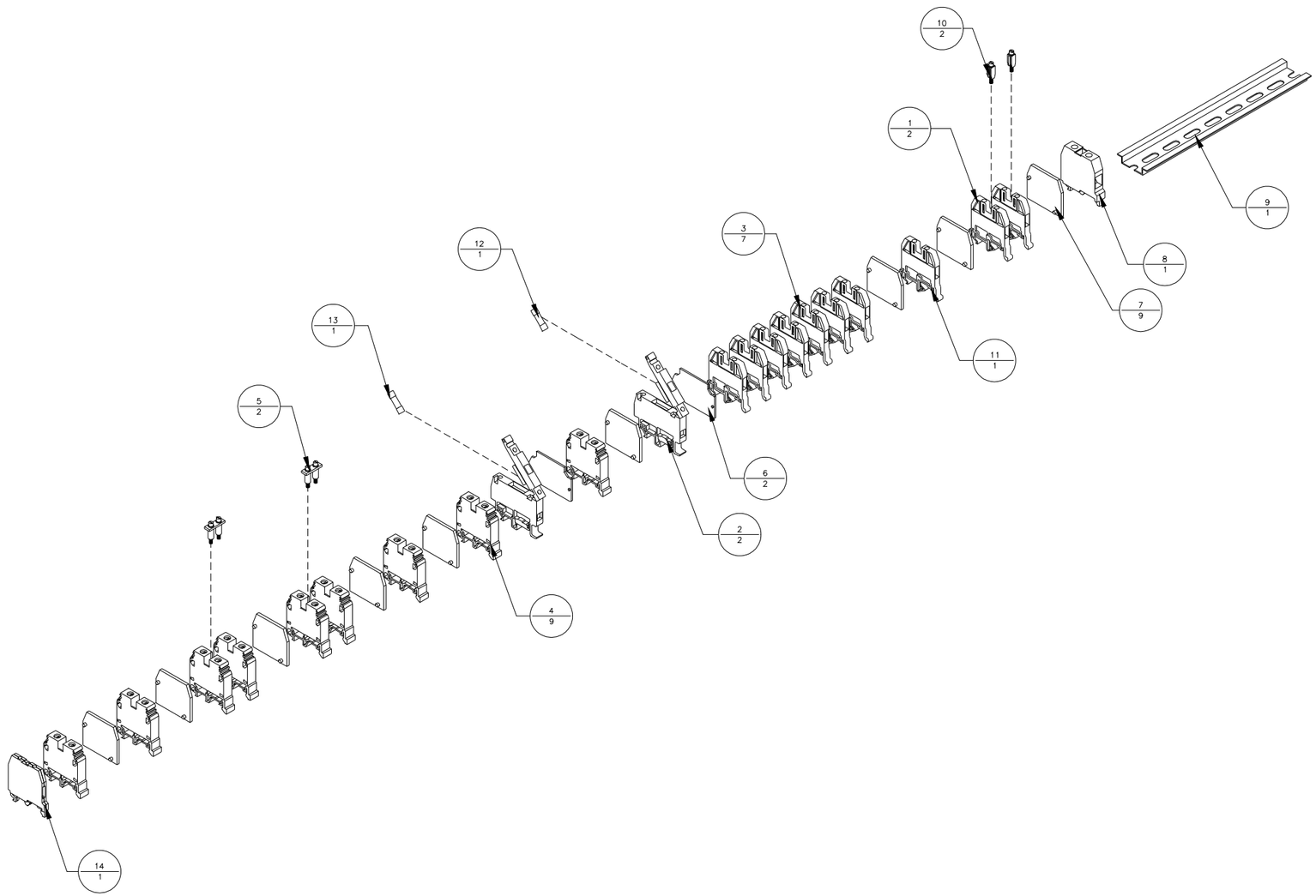

Table A27: *Terminal Block 2 Assembly (615461A)*

Item	Part Number	Quantity	Description	Reference
1	615000	2	Terminal Block, M4/6.N, Blue, 6mm	
2	615001	2	Fuse Holder, M4/8, SF2, Grey, 8mm, 6.3 A	
3	615002	7	Terminal Block, M4/6, Grey, 6mm	
4	615003	9	Terminal Block, M10/10, Grey, 10mm, 7.5 A	
5	615006	2	Jumper Bar, BJM10	
6	615011	2	End Section, FEM8S, Grey, 1.5mm	
7	615012	9	End Section, FEM6, Grey, 2.5mm	
8	615018	1	Ground Block, M10/10.P, Green & Yellow	
9	615021	1	T Rail, DIN, 8 1/8"	
10	615022	2	Jumper Bar, BJM6	
11	615025	1	Terminal Block, M4/6, Black, 6mm	
12	646001	1	Fuse, 5 X 20, 5 A	
13	646005	1	Fuse, 5 x 20 1 A	
14	615017	1	Terminal, EK2.5/35, Ground	

Figure A28: *Jet Drive I/O Ribbon Cable, (614320A)*

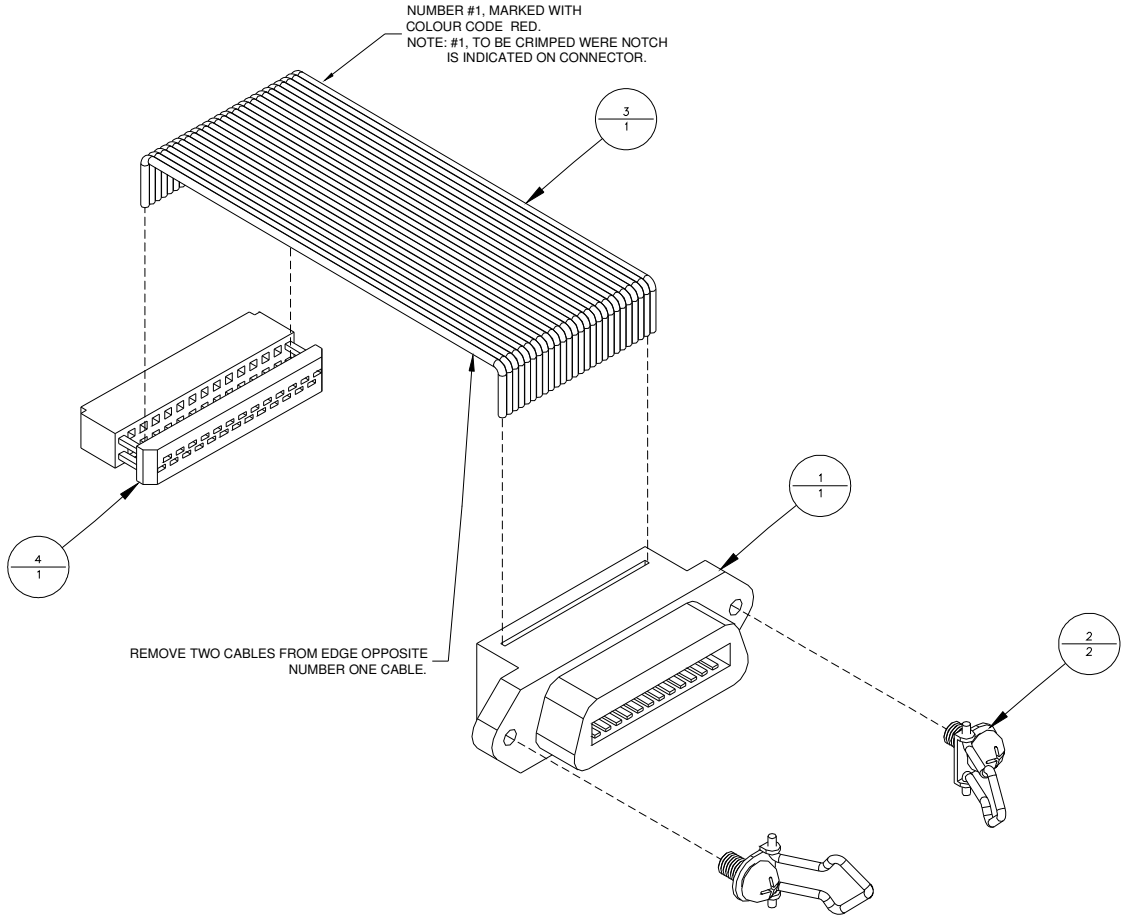

Table A28: *Jet Drive I/O Cable (614320A)*

Item	Part Number	Quantity	Description	Reference
1	614320	1	Screw, Lock Receptacle, 24 Pin	
2	614302	2	Ball Lock Kit	
3	606325	1	Ribbon Cable, #28-26, Grey, Unshielded, 35”	
4	614307	1	Receptacle, Center Polarized, 26 Pin	

Figure A29: *Keypad Power Cable, (606343A)*

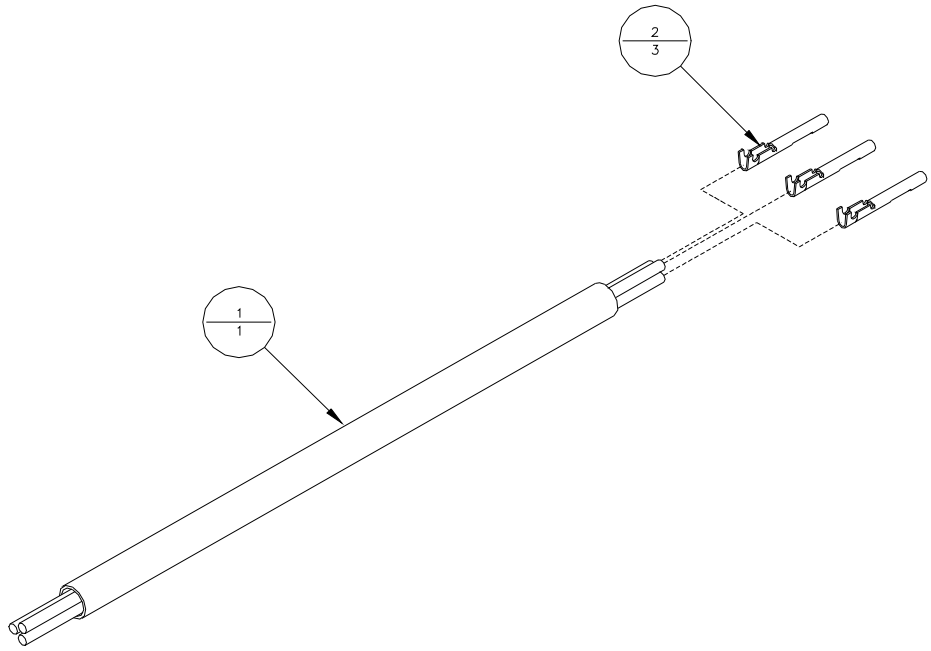

Table A29: *Keypad Power Cable (606343A)*

Item	Part Number	Quantity	Description	Reference
1	606030	1	Cable, #18-3, Unshielded, 40”	
2	614123	3	Socket Contact, Female, Blue	

Appendix

B

Electrical System

Terminal Block 1 Assembly

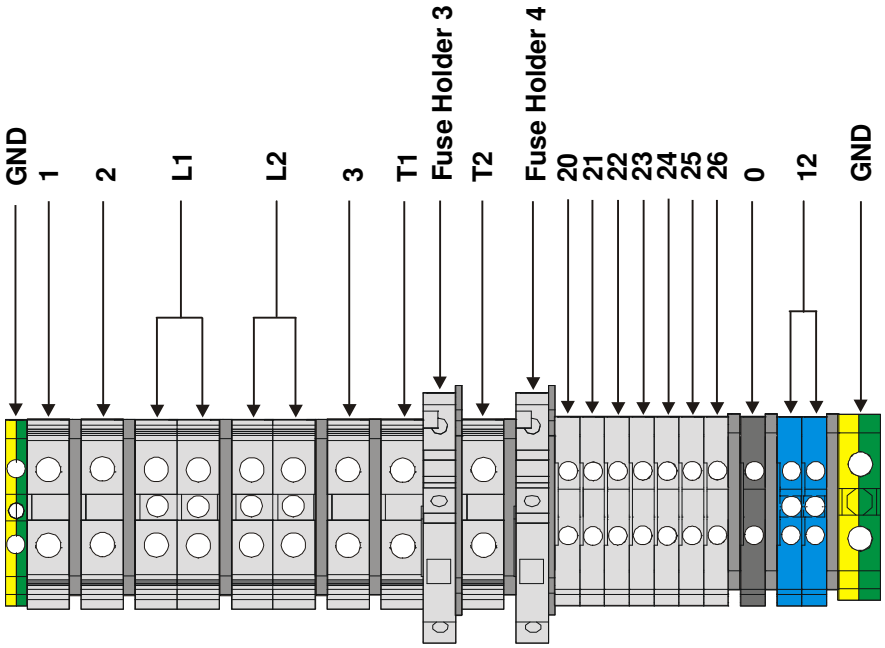

Table B.1 *- Terminal Block 1 Part List*

Symbol	Name	Part Number	Description
GND	Earth Ground	615017	Ground Terminal Block, EK2.5/35
1	220 VAC, Supply Power	615003	Terminal Block, M10/10, Grey
2	220 VAC, Supply Power	615003	Terminal Block, M10/10, Grey
L1	220 VAC, Switched Power	615003	Terminal Block, M10/10, Grey
L2	220 VAC, Switched Power	615003	Terminal Block, M10/10, Grey
3	Pump Rocker Switch	615003	Terminal Block, M10/10, Grey
T1	120 VAC Switch Power	615003	Terminal Block, M10/10, Grey
Fuse Holder 3	120 VAC Fuse	615001 646001	Fuse Holder, M4/8.SF2 Fuse, GMA-5, 120 VAC, 5 A
T2	120 VAC Switch Power	615003	Terminal Block, M10/10, Grey
Fuse Holder 4	120 VAC Fuse	615001 646005	Fuse Holder, M4/8.SF2 Fuse, GMA-10, 120 VAC, 1 A
20	Photo Cue Signal	615002	Terminal Block, M4/6, Grey
21	Machine Cycle	615002	Terminal Block, M4/6, Grey
22	Jam Switch	615002	Terminal Block, M4/6, Grey
23	Shaft Encoder A	615002	Terminal Block, M4/6, Grey
24	Shaft Encoder Ā	615002	Terminal Block, M4/6, Grey
25	K3-8 Machine Stop Relay	615002	Terminal Block, M4/6, Grey
26	Piece Counter	615002	Terminal Block, M4/6, Grey
0	0 VDC	615000	Terminal Block, M4/6, Black
12	+12 VDC	615024	Terminal Block, M4/6, Blue
GND	Earth Ground	615018	Ground Terminal Block, M10/10.P

Terminal Block 2 Assembly

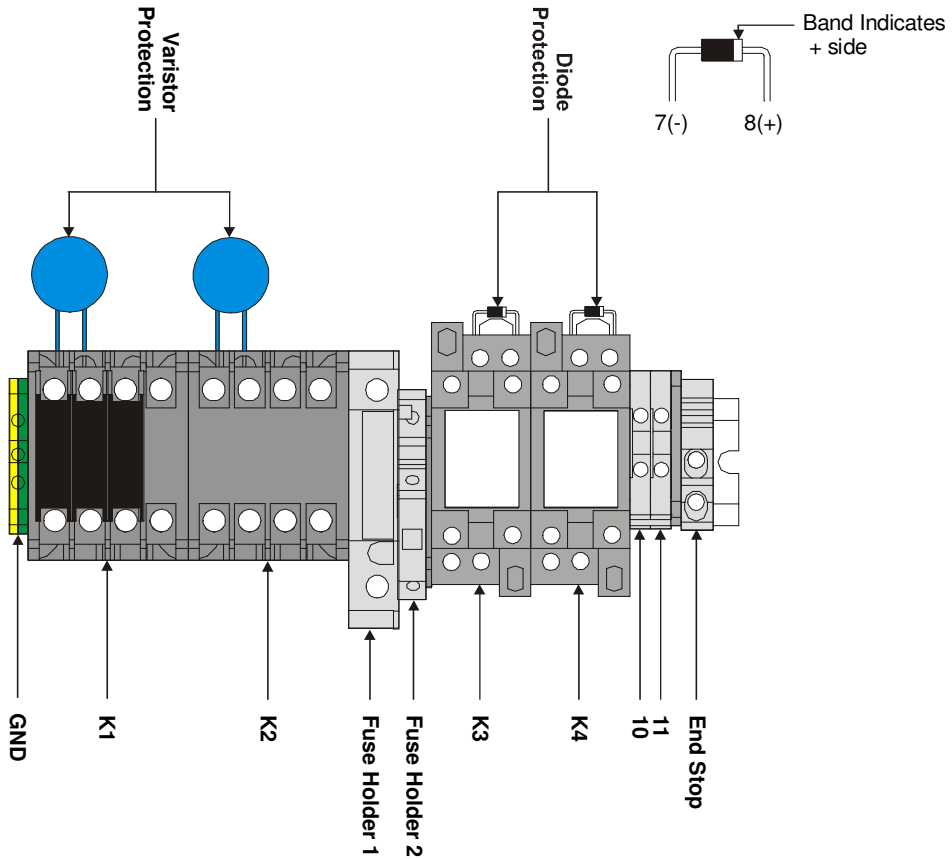

Table B.2: *Terminal Block 2 Part List*

Symbol	Name	Part Number	Description
GND	Earth Ground	615017	Ground Terminal Block, EK2.5/35
K1	Machine Contactor	610001 640300	Contactor, 120 VAC Varistor Protection, S20K130
K2	Conveyor Contactor	615001 640300	Contactor, 120VAC Varistor Protection, S20K130
Fuse Holder 2	Fuse Holder, 5A	615001	Fuse Holder, Grey, 8mm
Fuse Holder 1	Fuse Holder, 10A	615024	Fuse Holder, Black, 10mm
K3	Stop Relay	615004 610102 640301	Relay Base, PTF08A Relay, 12 VDC Diode, 1N4004
K4	Stack Relay	615004 610102 640301	Relay Base, PTF08A Relay, 12 VDC Diode, 1N4004
10	Remote Start	615002	Terminal Block, Grey, 6mm
11	Remote Stop	615002	Terminal Block, Grey, 6mm

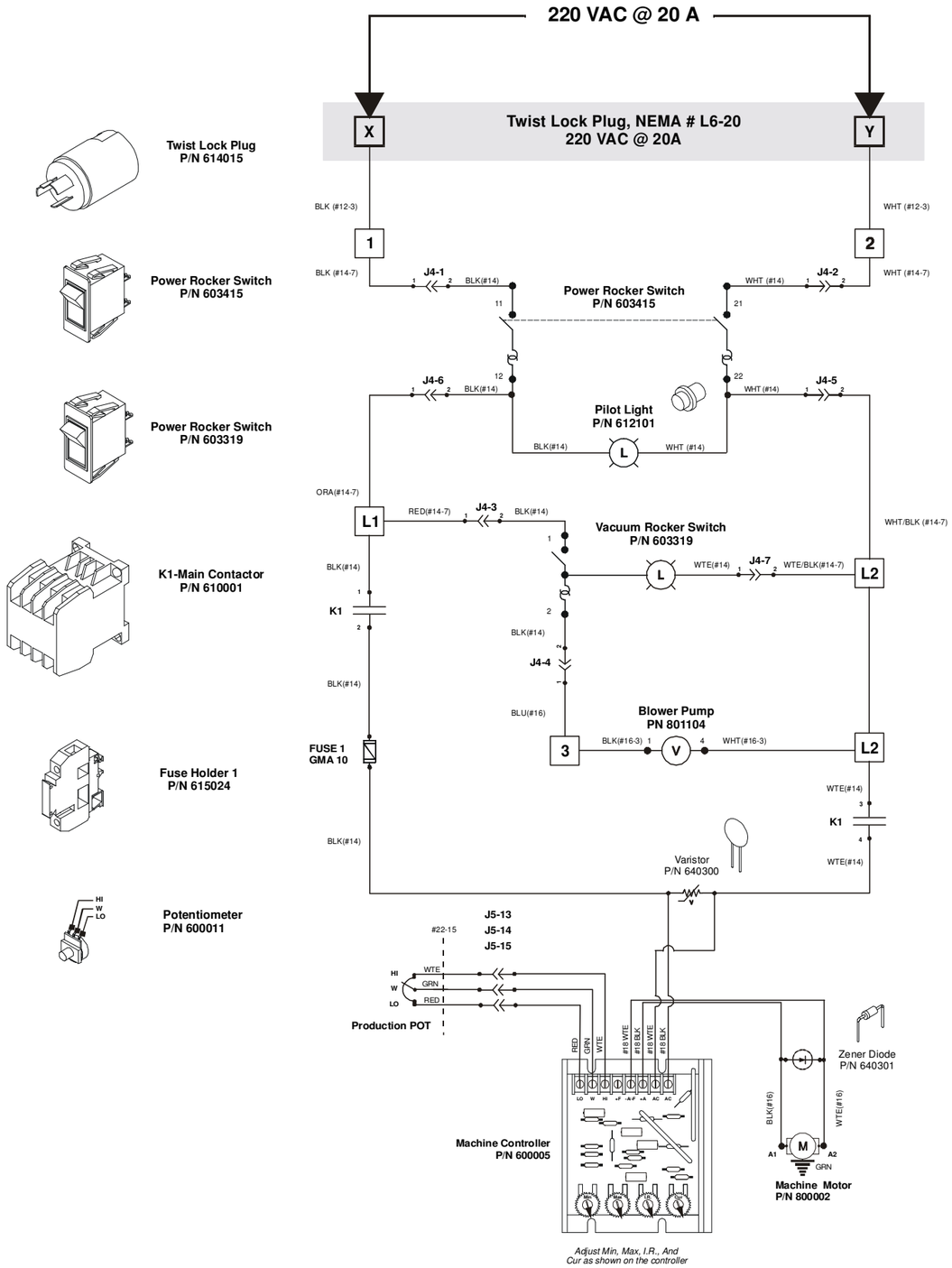
220 VAC @ 20 A
Twist Lock Plug, NEMA # L6-20
220 VAC @ 20A
X
Y
Twist Lock Plug
P/N 614015
BLK (#12-3)
WHT (#12-3)
1
2
Power Rocker Switch
P/N 603415
BLK (#14-7)
J4-1
BLK(#14)
Power Rocker Switch
P/N 603415
WHT (#14)
J4-2
WHT (#14-7)
11
21
12
22
Power Rocker Switch
P/N 603319
J4-6
BLK(#14)
J4-5
WHT (#14)
Pilot Light
P/N 612101
BLK(#14)
WHT (#14)
L
ORA(#14-7)
L1
RED(#14-7)
J4-3
BLK(#14)
Vacuum Rocker Switch
P/N 603319
WHT/BLK (#14-7)
K1-Main Contactor
P/N 610001
BLK(#14)
WTE(#14)
J4-7
WTE/BLK(#14-7)
L2
K1
BLK(#14)
J4-4
BLK(#14)
BLU(#16)
Blower Pump
PN 801104
FUSE 1
GMA 10
3
BLK(#16-3)
V
WHT(#16-3)
L2
Fuse Holder 1
P/N 615024
WTE(#14)
K1
BLK(#14)
WTE(#14)
Varistor
P/N 640300
Potentiometer
P/N 600011
HI
W
LO
#22-15
J5-13
J5-14
J5-15
HI
W
LO
WTE
GRN
RED
Production POT
RED
GRN
WTE
#18 WTE
#18 BLK
#18 WTE
#18 BLK
Zener Diode
P/N 640301
Machine Controller
P/N 600005
BLK(#16)
WTE(#16)
A1
M
A2
GRN
Machine Motor
P/N 800002
Adjust Min, Max, I.R., And
Cur as shown on the controller

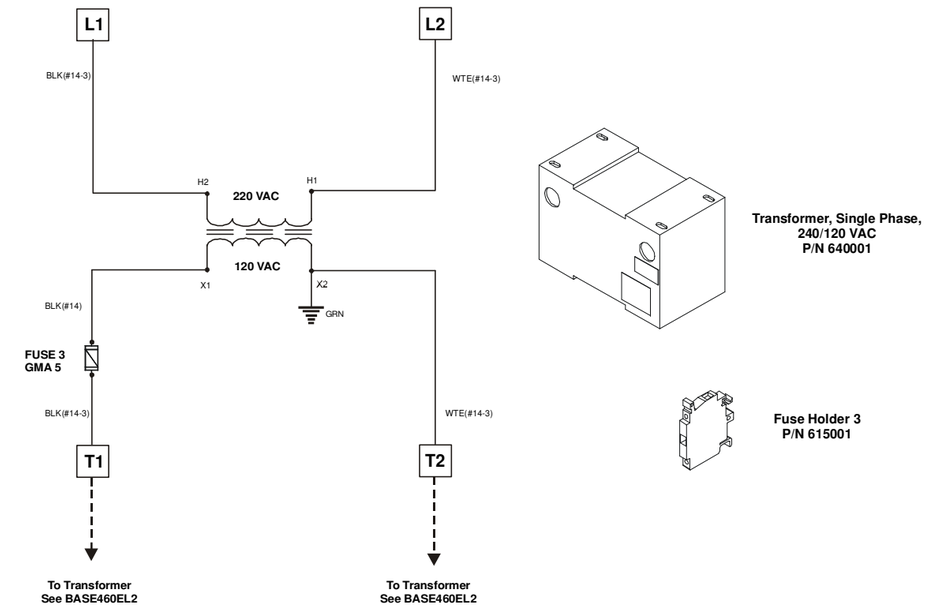
L1
L2
BLK(#14-3)
WTE(#14-3)
H2
H1
220 VAC
120 VAC
X1
X2
GRN
Transformer, Single Phase,
240/120 VAC
P/N 640001
BLK(#14)
FUSE 3
GMA 5
BLK(#14-3)
WTE(#14-3)
Fuse Holder 3
P/N 615001
T1
T2
To Transformer
See BASE460EL2
To Transformer
See BASE460EL2

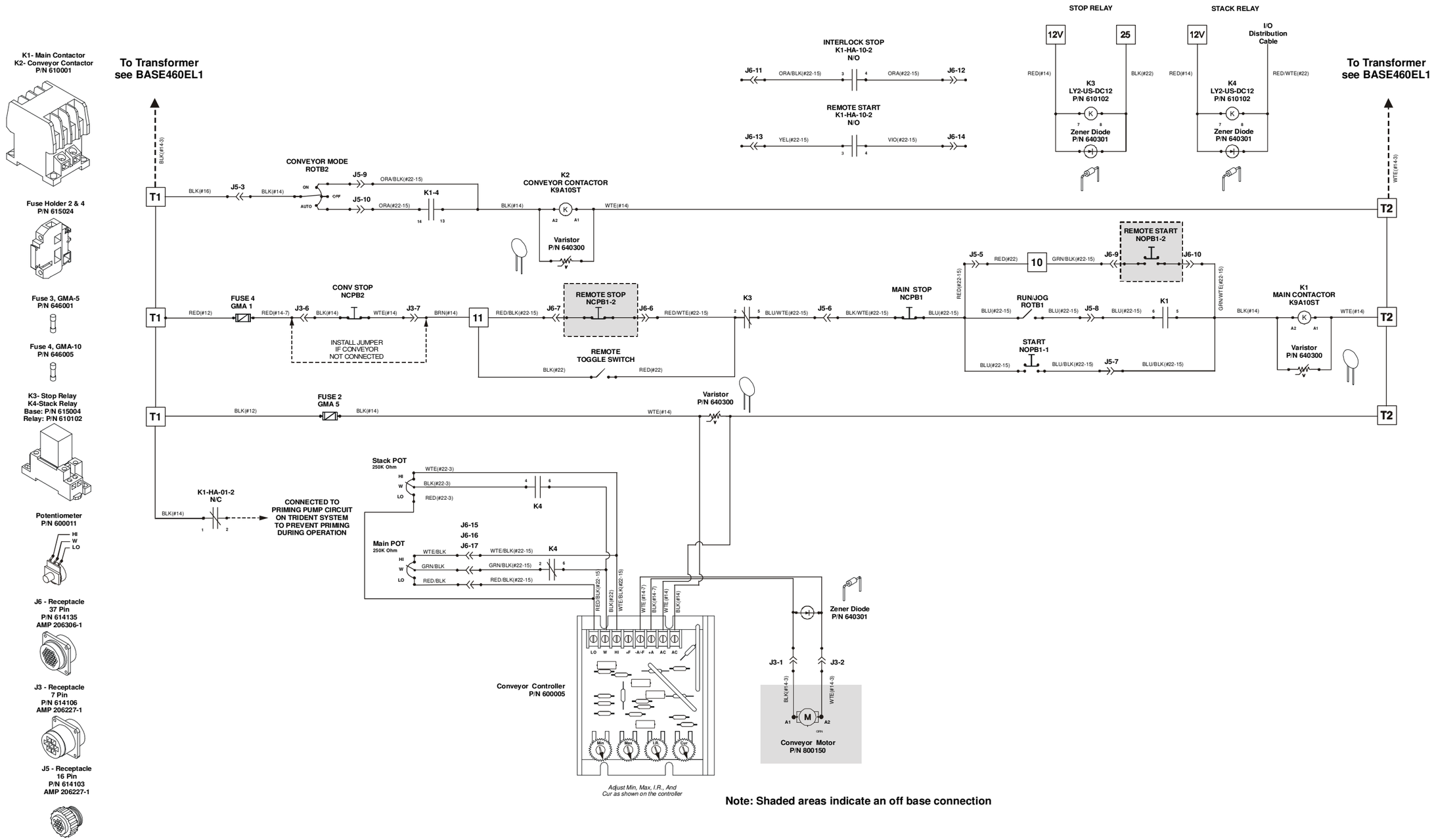

Note: Shaded areas indicate an off base connection

J6 - Inline Connector

PART NUMBER: 614135

DESCRIPTION: To provide an inline connection between the Base and the BK530 tabbing system.

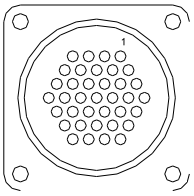

TYPE: 37 Pin AMP connector
REFERENCE: AMP #206306-1 & 206305-1
ORIGIN: Base Control Board (J5)
DESTINATION: Inline Connector

Table B.3 *– J6-Inline Connector Pin Assignment*

Pin	Function
1	Cycle Switch Input
2	Cycle Switch +12 VDC
3	Cycle Switch 0 VDC
4	Control Speedpot, Wiper
5	Control Speedpot, Wiper
6	Control Speedpot, Low
7	Remote Stop
8	Remote Stop
9	Remote Start
10	Remote Start
11	Interlock Stop Out
12	Interlock Stop Out
13	Feeder Start Out
14	Feeder Start Out
15	Not Connected
16	Not Connected
17	Not Connected
18	Not Connected
19	Not Connected
20	Not Connected
21	Not Connected
22	Not Connected
23	Not Connected
24	Not Connected
25	Not Connected
26	Not Connected
27	Not Connected
28	Not Connected
29	Not Connected
30	Not Connected
31	Not Connected
32	Not Connected
33	Not Connected
34	Not Connected
35	Not Connected
36	Not Connected
37	Not Connected

J3 - Conveyor Connector

PART NUMBER: 614106, 614127

DESCRIPTION: To provide an inline connection between the Inkjet Base and the BK1600 conveyor system.

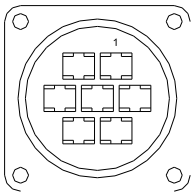

TYPE: 7 Pin AMP Connector
REFERENCE: AMP #206137-1, 206227-1
ORIGIN: Base Control Board (J6), Conveyor DCC
DESTINATION: BK1600 Conveyor

***Table B.4** – J3-Conveyor Connector Pin Assignment*

Pin	Function
1	Conveyor DCC-A1, Conveyor Motor A1
2	Conveyor DCC-A2, Conveyor Motor A2
3	Terminal GND, Ground
4	Jumper to Pin 6
5	Not Connected
6	Conveyor Stop
7	Conveyor Stop

JB1 - Sensor Input Connector

PART NUMBER: 614001

DESCRIPTION: Connector that provides power to the Photocue, Cycle-proxi Switch and Jam Stop Microswitch sensors.

TYPE: 3 Pin AMP Connector
REFERENCE: AMP #172329-1, 172337-1
ORIGIN: Base Control Board (J2)
DESTINATION: Photocue/Cycle/Jam Stop sensors

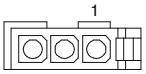

Table B.5 *– JB1-Sensor Input Connector Pin Assignment*

Pin	Function
1	Photocue Input
2	+12 VDC
3	-0 VDC

JB2 - Shaft Encoder Connector

PART NUMBER: 614007

DESCRIPTION: Connector that provides power to the Shaft Encoder.

TYPE: 4 Pin AMP Connector
REFERENCE: AMP #1-480424-0, 606017-1
ORIGIN: Shaft Encoder
DESTINATION: Base Control Board (J2)

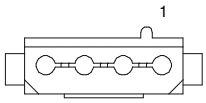

Table B.6 *– JB2-Shaft Encoder Connector Pin Assignment*

Pin	Function
1	Shaft Encoder Input, A+
2	Shaft Encoder Input, A-
3	+12 VDC
4	-0 VDC